FILE NO. 120-200195

TOSHIBA

SERVICE MANUAL

VIDEO CASSETTE RECORDER

W-622

NOV, 2001

TOTAL CONTENTS

1. Precautions

2. Reference Information

3. Product Specifications

4. Disassembly and Reassembly

5. Alignment and Adjustment

6. Exploded View

7. Replacement Parts List

8. Block Diagram

9. PCB Diagrams

10. Schematic Diagrams

1. Precautions

1. Be sure that all of the built-in protective devices are replaced. Restore any missing protective shields.

2. When reinstalling the chassis and its assemblies, be sure to restore all pretective devices, including : control knobs and compartment covers.

3. Make sure that there are no cabinet openings through which people--particularly children --might insert fingers and contact dangerous voltages. Such openings include the spacing between the picture tube and the cabinet mask, excessively wide cabinet ventilation slots, and improperly fitted back covers.

   If the measured resistance is less than 1.0 megohm or greater than 5.2 megohms, an abnormality exists that must be corrected before the unit is returned to the customer.

4. Leakage Current Hot Check (See Fig. 1-1) :
   Warning : Do not use an isolation transformer during this test. Use a leakage current tester or a metering system that complies with American National Standards Institute (ANSI C101.1, *Leakage Current for Appliances*), and Underwriters Laboratories (*UL Publication UL1410, 59.7*).

5. With the unit completely reassembled, plug the AC line cord directly the power outlet. With the unit's AC switch first in the ON position and then OFF, measure the current between a known erath ground (metal water pipe, conduit, etc.) and all exposed metal parts, including : antennas, handle brackets, metal cabinets, screwheads and control shafts. The current measured should not exceed 0.5 milliamp. Reverse the power-plug prongs in the AC outlet and repeat the test.

6. X-ray Limits :
   The picture tube is designed to prohibit X-ray emissions. To ensure continued X-ray protection, replace the picture tube only with one that is the same type as the original.

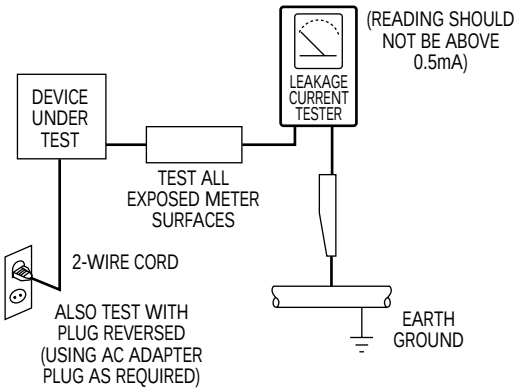

Fig. 1-1 AC Leakage Test

7. Antenna Cold Check :
   With the unit's AC plug disconnected from the AC source, connect an electrical jumper across the two AC prongs. Connect one lead of the ohmmeter to an AC prong.
   Connect the other lead to the coaxial connector.

8. High Voltage Limit :
   High voltage must be measured each time servicing is done on the B+, horizontal deflection or high voltage circuits.

   Heed the high voltage limits. These include the *X-ray protection Specifications Label*, and the *Product Safety and X-ray Warning Note* on the service data schematic.

9. Some semiconductor ("solid state") devices are easily damaged by static electricity.
   Such components are called Electrostatically Sensitive Devices (ESDs); examples include integrated circuits and some field-effect transistors. The following techniques will reduce the occurrence of component damage caused by static electricity.

10. Immediately before handling any semiconductor components or assemblies, drain the electrostatic charge from your body by touching a known earth ground. Alternatively, wear a discharging Wrist-strap device. (Be sure to remove it prior to applying power--this is an electric shock precaution.)

11. High voltage is maintained within specified limits by close-tolerance, safety-related components and adjustments. If the high voltage exceeds the specified limits, check each of the special components.

12. Design Alteration Warning :
Never alter or add to the mechanical or electrical design of this unit. Example : Do not add auxiliary audio or video connectors.
Such alterations might create a safety hazard. Also, any design changes or additions will void the manufacturer's warranty.

13. Hot Chassis Warning :
Some TV receiver chassis are electrically connected directly to one conductor of the AC power cord. If an isolation transformer is not used, these units may be safely serviced only if the AC power plug is inserted so that the chassis is connected to the ground side of the AC source.

To confirm that the AC power plug is inserted correctly, do the following : Using an AC voltmeter, measure the voltage between the chassis and a known earth ground. If the reading is greater than 1.0V, remove the AC power plug, reverse its polarity and reinsert. Re-measure the voltage between the chassis and ground.

14. Some TV chassis are designed to operate with 85 volts AC between chassis and ground, regardless of the AC plug polarity. These units can be safely serviced only if an isolation transformer inserted between the receiver and the power source.

15. Never defeat any of the B+ voltage interlocks.
Do not apply AC power to the unit (or any of its assemblies) unless all solid-state heat sinks are correctly installed.

16. Always connect a test instrument's ground lead to the instrument chassis ground before connecting the positive lead; always remove the instrument's ground lead last.

17. Observe the original lead dress, especially near the following areas : Antenna wiring, sharp edges, and especially the AC and high voltage power supplies. Always inspect for pinched, out-of-place, or frayed wiring. Do not change the spacing between components and the printed circuit board. Check the AC power cord for damage. Make sure that leads and components do not touch thermally hot parts.

18. Picture Tube Implosion Warning :
The picture tube in this receiver employs "integral implosion" protection. To ensure continued implosion protection, make sure that the replacement picture tube is the same as the original.

19. Do not remove, install or handle the picture tube without first putting on shatterproof goggles equipped with side shields. Never handle the picture tube by its neck. Some "in-line" picture tubes are equipped with a permanently attached deflection yoke; do not try to remove such "permanently attached" yokes from the picture tube.

20. Product Safety Notice :
Some electrical and mechanical parts have special safety-related characteristics which might not be obvious from visual inspection. These safety features and the protection they give might be lost if the replacement component differs from the original--even if the replacement is rated for higher voltage, wattage, etc.

Components that are critical for safety are indicated in the circuit diagram by shading, (⚠ or ⚠).
Use replacement components that have the same ratings, especially for flame resistance and dielectric strength specifications. A replacement part that does not have the same safety characteristics as the original might create shock, fire or other hazards.

2. Reference Information

2-1 Operation of Controls

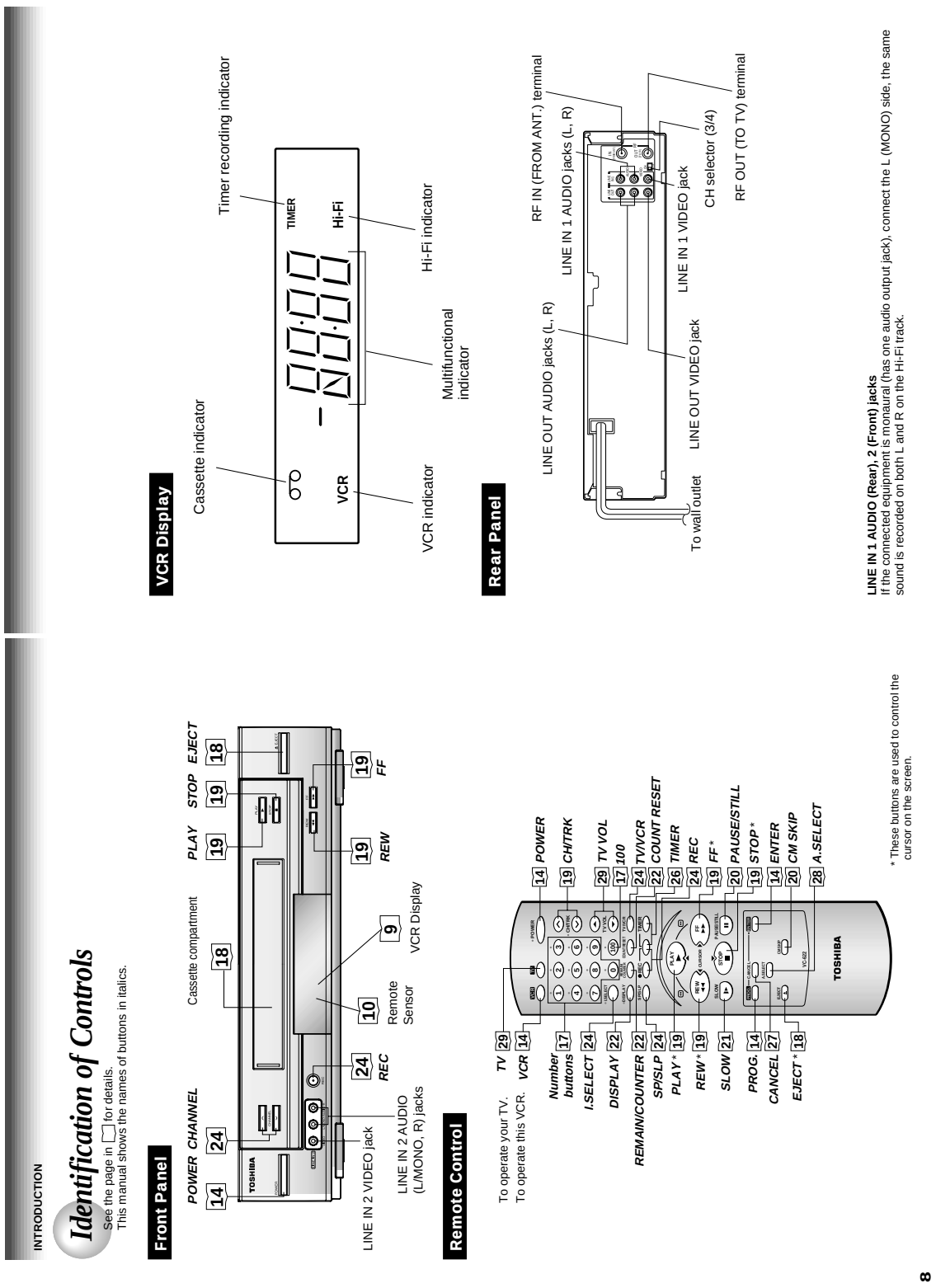

How to Use the Remote Control

This section explains how to get ready for remote control operation.

Setting up the Remote Control

1 Open the battery compartment lid on the rear panel.

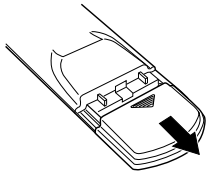

2 Install 2 batteries ("AAA" size) following the polarity diagrams.

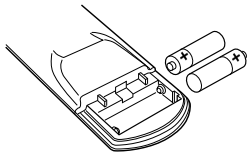

3 Close the battery compartment lid.

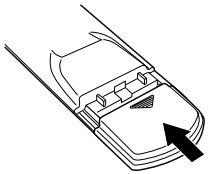

4 Point the remote control at the VCR and press the buttons within the operating range.
Distance: within about 7 m from the front of the remote sensor
Angles: within about 30° in every direction

Notes on batteries

- The life of the batteries is about 1 year depending on the conditions of use.
- If the remote control does not operate correctly, replace all batteries with new ones.
- If the remote control is not to be used for a long period of time, remove the batteries to avoid possible damage from battery corrosion.

Caring for the remote control

- Do not expose the remote sensor of the VCR to a strong light source such as direct sunlight or illumination (especially high-frequency lighting) when using the remote control.
- Be careful not to spill water on the remote control or to place it on anything wet, and avoid sharp impacts.

Connections

Before you use this VCR, it is necessary to connect it to your TV. Several ways of connecting are available depending on your use of TV or cable box. Select one which is applicable to your equipment.

Antenna / VCR / TV Connection

1 Disconnect the antenna cable from your TV and connect it to the **RF IN** terminal on the VCR.

2 Connect the **RF OUT** terminal to the TV.

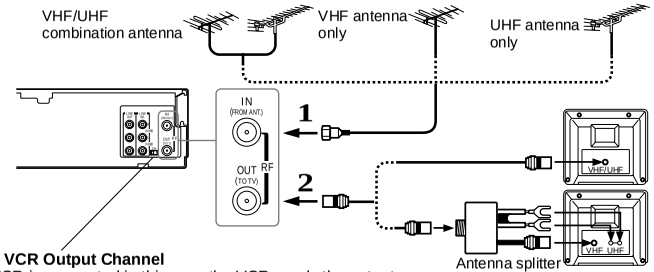

Setting the VCR Output Channel
When the VCR is connected in this way, the VCR sends the output signals to channel 3 or 4 on your TV. Set the output channel selector (CH selector) of the VCR to "3" or "4", whichever is vacant in your area.

AUDIO / VIDEO Connections

The AUDIO/VIDEO jacks are also available to connect your TV.

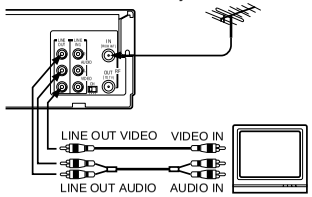

When connected your TV using the AUDIO / VIDEO OUT jacks

To watch video pictures, set the video input mode on your TV. For the video input mode, refer to the manual of your TV.

Cable Connection

Choose one of the below according to your usage of the cable box.

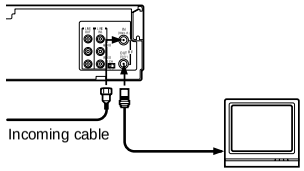

This set-up will enable you to:

– record an unscrambled channel.
– watch an unscrambled channel while recording it.
– record an unscrambled channel while watching another (only when you connect a cable-compatible TV).

You will need to:

- select TV channel 3 or 4 to receive video signals.
- to record a channel while watching another, press ***TV/VCR*** on the remote control to turn off the "VCR" indicator in the VCR display and select a desired channel on the TV (only when you connect a cable-compatible TV).

Connections (continued)

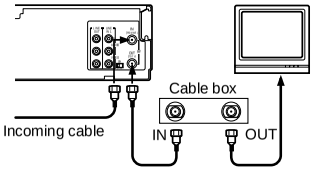

This set-up will enable you to:

– record an unscrambled channel.
– watch an unscrambled channel while recording it.
– record an unscrambled channel while watching another (scrambled or unscrambled).

You will need to:

- set TV channel to the output channel of the cable box.
- turn on the cable box and select cable channel 3 or 4 according to the output channel of the VCR.
- to record a channel while watching another, press ***TV/VCR*** on the remote control to turn off the "VCR" indicator in the VCR display and select a desired cable channel on the cable box.

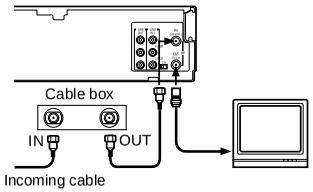

This set-up will enable you to:

– watch an unscrambled or scrambled channel while recording it.
– record any channels through the cable box.

You will need to:

- set TV channel 3 or 4 to receive video signals. (See page 11.)
- set VCR channel to the output channel of the cable box, and select a desired cable channel on the cable box.
- while the VCR is turned off or the "VCR" indicator is not lit in the VCR display, set TV channel to the output channel of the cable box.

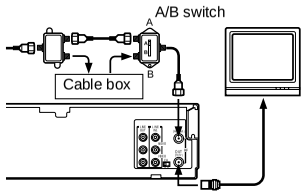

This set-up will enable you to:

– watch an unscrambled or scrambled channel while recording it.
– record an unscrambled channel while watching another unscrambled channel (only when you connect a cable-compatible TV).
- A/B switch "A": record and watch an unscrambled channel which comes bypassing the cable box.
- A/B switch "B": record and watch a scrambled or unscrambled channel coming through the cable box.

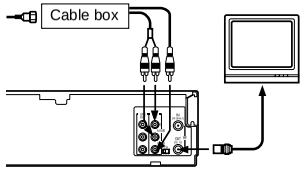

This set-up will enable you to:

– watch or record a channel through the cable box via the LINE IN 1 (AUDIO/VIDEO) jacks.

You will need to:

- press ***I.SELECT*** so that the VCR display shows "L1".

Auto Set Up

The VCR's clock and tuner channels are set automatically when the VCR is plugged into the AC outlet.

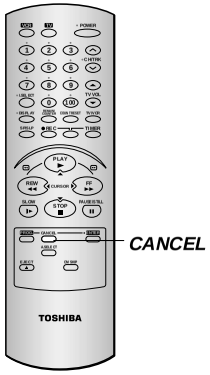

Auto Set up

1 Plug the VCR into the AC outlet

2 "Auto" blink while the VCR automatically sets the clock using the data broadcast by the local TV stations.
While "Auto" is blinking, channel memory is also set automatically.

3 When Auto set up has been completed, the VCR is on standby mode.

Notes

- It may takes several minutes during the Auto set-up
- Press ***CANCEL*** on the remote control to cancel the auto set-up.

Initial Settings Using On-screen Display

The language selection and clock setting must be set first when VCR is first plugged in or after it encounters a power failure.

Preparation

- Turn on the TV, and select the video channel (3 or 4), or the video input mode if you made the Audio/Video connection (page 11).
- Press VCR to set the remote control operating the VCR.

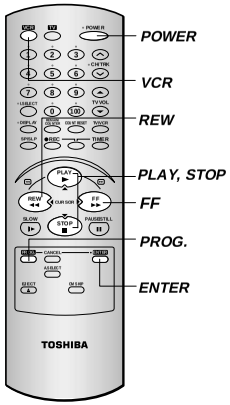

Setting the Language

1 Press ***POWER*** to turn on the VCR.

2 Press ***PROG.***.
The following screen appears on the TV.

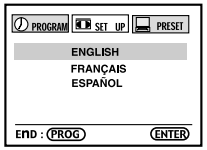

3 Select the language using ***PLAY*** or ***STOP*** and press ***PROG.***
The screen turns to the MENU screen.

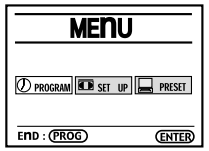

4 Press ***PROG.*** to return to the normal TV screen.

Optional settings on the SET UP screen

Other optional settings can be made. Press ***ENTER*** while "SET UP" is selected on the MENU screen. The screen turns to the SET UP screen.

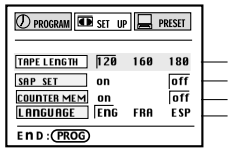

Page 22
Page 28
Page 23
To change the language, move down here and set to the desired one.

To exit, press ***PROG.*** once.

Setting the Clock

Example: To set the clock to 2:30 p.m. on August 25 (summer time) 2002.

1 Press ***PROG.***.
The MENU screen appears on the TV.

2 Select "PRESET" using ***FF*** or ***REW***, and press ***ENTER***.

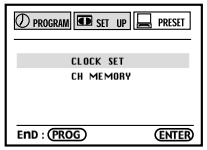

3 Press ***ENTER*** to select "CLOCK SET".

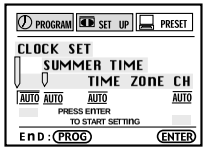

4 Select "AUTO" or "MANU" using ***PLAY*** or ***STOP***.
AUTO: The VCR automatically sets or adjusts the clock.
If you select "AUTO" mode, proceed to step **8**.
MANU: You can set the clock manually.
If you select "MANU" mode, proceed to next step.

5 Vary the digits to set the hour.
PLAY : To increase.
STOP : To decrease.

6 Move to the next using ***FF***
(To move back, press ***REW***.)

7 Repeat step **5** and **6** to set the minutes, month, day, and the year (by the last two digits).
Proceed to step **10** to start the clock.

8 Press ***ENTER*** to start the "AUTO" clock set feature.
After the VCR is turned off, it automatically updates the clock using the data broadcast by the local TV stations.
*The clock is revised by broadcasting signal at 8:00 A.M every morning.

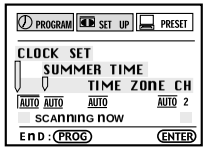

9 Select the options using ***FF*** or ***REW***. Change the data using ***PLAY*** or ***STOP***.

1) Set "SUMMER TIME (Daylight-Saving Time)".
DST start: Daylight-saving time begins on the first Sunday in April. Because the clock automatically changes from 2:00 AM to 3:00 AM (forward one hour).
DST end: Daylight-saving time ends on the last Sunday in October. The VCR clock automatically changes from 2:00 AM to 1:00 AM (back one hour).
remember that any part of a scheduled Timer Recording that falls between these two times will not be recorded.
AUTO: the VCR is using the clock data Broadcast by the local TV stations.
IN: You want to use the DST function, and you are leaving in the area that apply Daylight-saving time.
OUT: You are not leaving in the area that apply Daylight-saving time and you do not want to use DST function.

2) Set "TIME ZONE".
If you select "AUTO" for your time zone, the VCR sets the clock using the first Coordinated Universal Time information it finds. If the time is not correct, select another time zone or use the "MANU" option.

3) Set "CLOCK DATA CH".
If you don't know the clock data channel, select "AUTO". The VCR will scan automatically to tune the channel carrying the clock data.

If AUTO CLOCK SET is unsuccessful, set the time and date through the "MANU" clock set menu selection.

10 Press ***PROG.***.
Now the clock starts.

Storing Channels on the VCR

This section is required if you receive only normal TV or unscrambled cable channels

Incoming Antenna/Cable(CATV) Signals

The VCR scans through all receivable TV and CATV channels and stores only the active ones in your area into the memory. Once the storing is finished, you can select a desired channel using ***CH/TRK.***

Preparation

- Turn on the TV, and select the video channel (3 or 4), or the video input mode if you made the Audio/Video connection (page 11).
- Press ***I.SELECT*** so that the channel number will appear if "L1" or "L2" is displayed in the VCR display.

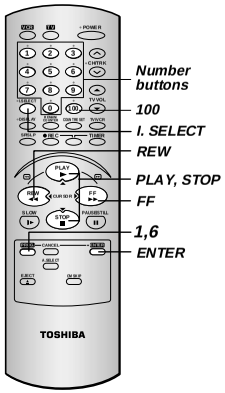

Incoming Antenna/Cable(CATV) Signals

1 Press ***PROG.*** to display the MENU screen.

2 Select "PRESET" using ***FF*** or ***REW***, and press ***ENTER***.

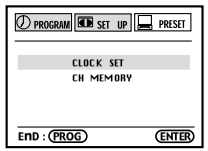

3 Select "CH MEMORY" using ***PLAY*** or ***STOP***, and press ***ENTER***.

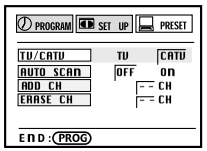

4 Set "TV/CATV" to "TV" or "CATV" using ***FF*** or ***REW***.

TV: To store channels received via the antenna.

CATV: To store channels received via the incoming cable.

5 Select "AUTO SCAN" using ***PLAY*** or ***STOP***, and press ***FF*** to set to "ON".

The VCR starts scanning and the channels are stored in the VCR in ascending order. When the scanning is finished, the screen automatically returns.

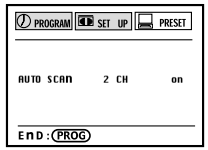

6 Press ***PROG.*** twice to exit.

Adding or erasing channels

Adding channels

If a desired channel cannot be scanned automatically because of a weak signal, it can be added to the memory.

Erasing channels

You can erase a stored channel from the memory if it is unnecessary.

1) Follow steps **1** to **3** of "Incoming Antenna/ CATV Signals".

2) Select "ADD CH" or "ERASE CH" using ***PLAY*** or ***STOP***.

To add channels

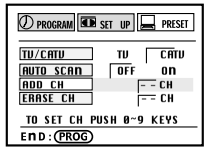

To erase channels

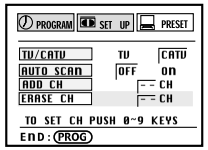

3) Enter a channel number of 1 to 125 using ***number buttons***.

For more than 100 number, first press ***100***.

For CATV channels, refer to the chart below. (For other orders, check with your cable company.)

4) Repeat steps **2)** and **3)** to add or erase channels as necessary.

5) Press ***PROG.*** twice to exit.

Selecting stored channels

Once the active channels have been stored, you can select the channels in two ways below.

Number buttons

To enter digits of the channel number.

- For one-digit number, enter 0 before.
- For more than 100 number, first press ***100***.
- Each *number button* needs to be pressed within 2 seconds.

CH/TRK buttons

To shift up or down the stored channel numbers.

Channel reference chart

Number on the VCR												CH NUMBER	1	2	3	4	5	6	7	8	9
Corresponding channel number												TV	–	2	3	4	5	6	7	8	9
												CATV STD (HRC/IRC)	1(A-8)	2	3	4	5(A-7)	6(A-6)	7	8	9
10	11	12	13	14	15	16	17	18	19	20	21	22	23	24	25	26	27	28	29	30
10	11	12	13	14	15	16	17	18	19	20	21	22	23	24	25	26	27	28	29	30
10	11	12	13	A	B	C	D	E	F	G	H	I	J	K	L	M	N	O	P	Q
31	32	33	34	35	36	37	38	39	40	41	42	43	44	45	46	47	48	49	50	51
31	32	33	34	35	36	37	38	39	40	41	42	43	44	45	46	47	48	49	50	51
R	S	T	U	V	W	AA	BB	CC	DD	EE	FF	GG	HH	II	JJ	KK	LL	MM	NN	OO
52	53	54	55	56	57	58	59	60	61	62	63	64	65	66	67	68	69	70	71	…
52	53	54	55	56	57	58	59	60	61	62	63	64	65	66	67	68	69	–	–	…
PP	QQ	RR	SS	TT	UU	VV	WW	XX	YY	ZZ	AAA	BBB	65	66	67	68	69	70	71	…
93	94	95	96	97	98	99	100	101	102	103	…	121	122	123	124	125				
–	–	–	–	–	–	–	–	–	–	–	…	–	–	–	–	–				
93	94	A-5	A-4	A-3	A-2	A-1	100	101	102	103	…	121	122	123	124	125				

CATV signals

- STD (standard) cable TV signals
- HRC (Harmonic Related Carriers) cable TV signals
- IRC (Incremental Related Carriers) cable TV signals
  IRC is also called ICC (Incremental Coherent Carriers)

Video Cassette Use

Video Cassette Use

Loading a cassette

Push the cassette into the cassette compartment with the window side facing up and the label side towards the front. The VCR is automatically turned on. The ⊂⊃ indicator will appear in the VCR display.

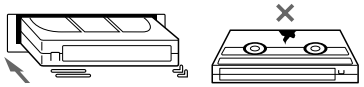

Ejecting a cassette

Press ***EJECT.*** The cassette is ejected from the cassette compartment.

> **Warning**
> Do not insert your hands or any foreign objects into the compartment. This may result in injury or damage. Take special care with children to avoid accidents.

Precautions when using video cassettes

Video cassettes have a safety tab to prevent accidental erasure. If the tab has already been removed, recording cannot be performed.

To prevent accidental erasure
Remove this safety tab with a screwdriver.

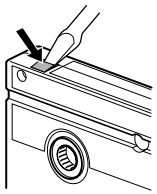

To record again
Cover the tab hole with adhesive tape.

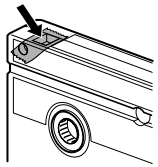

- Avoid exposing cassettes to direct sunlight. Keep them away from heaters.
  Avoid extreme humidity, vibrations or shock, strong magnetic fields (near a motor, transformer or magnet) and dusty place.

Playback

This section explains the basic playback operation.

Preparation
- Select the video channel (3 or 4) or video input mode on the TV.
- **Press VCR to set the remote control operating the VCR.**

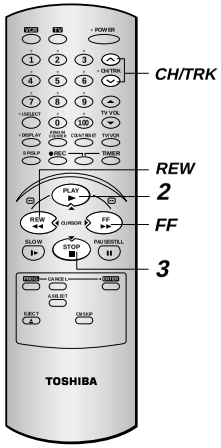

Basic Playback

1 Load a recorded cassette.
Power is turned on.
If the cassette has no safety tab, playback starts automatically.

2 Press ***PLAY*** to start playback.

3 To stop playback, press ***STOP***.

Double Speed Playback

1 Press ***PLAY*** during playback.
A tape runs at double speed playback.

To resume normal playback Press ***PLAY***

Rewinding / Fast-forwarding

Press ***REW*** or ***FF*** in the stop mode.

Adjusting the tracking

When playback starts, the VCR automatically adjusts the tracking for clear pictures and sound (Digital Auto Tracking).
If the VCR cannot locate the best possible tracking point, hold down one of ***CH/TRK*** to adjust the tracking manually.

Notes
- During the adjusting, the playback picture and sound may be distorted.
- The digital auto tracking is activated only in the playback mode.
- The noise on the screen may not be completely eliminated depending on the tape used, especially when the tape was recorded on another VCR.

> **S-VHS Quasi Playback (SQPB)**
>
> - This VCR can also play back at tape which is recorded in S-VHS format.
> But the playback pictures does not have the same quality and resolution as the original S-VHS playback picture.
> - This VCR cannot record in S-VHS format.
> - SQPB is an abbreviation for S-VHS Quasi Playback.

Variable Speed Playback

You can play back a tape at various tape speeds.

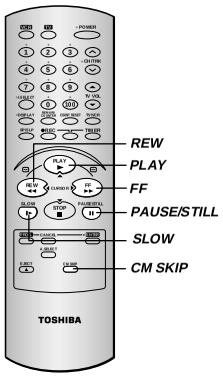

Picture Search

A tape runs at 5 times or 7 times the normal playback speed so that you can quickly locate a particular scene.

1 Press ***FF*** or ***REW*** during playback.
The tape runs at 5 times the normal playback speed.

2 To change the tape speed to 7 times the normal playback speed, press and hold ***FF*** or ***REW***.
If you release it, the tape speed returns to 5 times.

Note
If you press ***FF*** or ***REW*** during picture search, the mode changes to fast-forwarding or rewinding.

To resume normal playback
Press ***PLAY***

Commercial Movie Skip

You can skip a portion of playback you do not want (such as a commercial) and then return to normal playback.

1 Press ***CM SKIP*** during playback.
The VCR will automatically search forward for 30 seconds to a maximum of 3 minutes (six presses) and then resume normal playback.

Still Picture

A picture freezes so that you can watch closer.

1 Press ***PAUSE/STILL*** during playback.
The picture freezes.

To resume normal playback
Press ***PAUSE/STILL*** again.

Notes
- The still mode is automatically cancelled after about 5 minutes and returns to normal playback.
- The still picture may shake if a picture of a fast-moving object or scene is frozen. This is not a defect in the unit.

Adjusting Still Picture Stability

If the still picture is distorted or flickers, hold down one of ***CH/TRK*** until the picture becomes stable.

Note
The distortion of the still picture may not be eliminated completely.

Frame Advance

A picture advances frame by frame.

1 Press ***PLAY*** during still playback.
Each time you press ***PLAY***, the picture advances one frame.

To resume normal playback
Press ***PAUSE/STILL.***

Slow-motion Picture

The tape runs at 1/7th or 1/15th the normal playback speed.

1 Press ***SLOW*** during playback.
The tape runs at about 1/7th the normal playback speed.
Each time you press ***SLOW***, the speed alternates between 1/7th and 1/15th.

To resume normal playback
Press ***PLAY.***

Notes
- The slow-motion picture mode is automatically cancelled after about 5 minutes and returns to normal playback.
- The slow-motion picture may flicker up and down. This is not a defect in the unit.

Adjusting the Tracking Manually

If the slow-motion picture is noisy, hold down one of ***CH/TRK*** until the best picture is obtained.

Note
The noise in the slow-motion picture may not be eliminated completely.

Useful Functions in Tape Operation

These functions will help your playback.

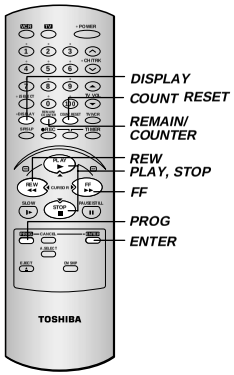

Counter Function

You can view the clock, linear time counter or tape remaining time in the VCR display or on the TV screen.

Each time you press ***REMAIN/COUNTER***, the VCR display changes in sequence as follows:

→ Linear time counter → Tape remaining time (R) → Clock

The indication above will also appear on the TV screen by pressing ***DISPLAY***. They are switchable with ***REMAIN/COUNTER***.

To reset the linear time counter to "0:00:00"

The counter is automatically reset to "0:00:00" when a cassette is ejected. If you want to reset at another point, such as the beginning of a new recording, just press ***COUNT RESET***.

Notes

- The linear time counter does not work on non-recorded portions on the tape.
- When the tape is ejected or the VCR is turned off, the display changes to clock.
- If the tape rewinds back over "00:00", "–" appears in the VCR display.
- The displayed time of the linear time counter is only an approximation.

Tape Remaining Time

To view the tape remaining time in the VCR display, select the tape length beforehand.

1 Turn on the VCR and load a cassette.

2 Press ***PROG.*** to display the MENU screen.

3 Select "SET UP" using ***FF*** or ***REW***, and press ***ENTER***.

4 Select the length of the tape, using ***FF*** or ***REW***.
T120: for a T-120 tape or shorter
T160: for a T-140 or T-160 tape
T180: for a T-180 tape

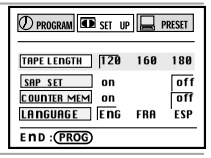

5 Press ***PROG.*** once to exit.

6 Press ***REMAIN/COUNTER***.
The remaining time ("R - : - -") appears in the VCR display.

Notes

- The displayed remaining time is an approximation.
- The remaining time is calculated according to the tape speed (SP or SLP) and the cassette type.

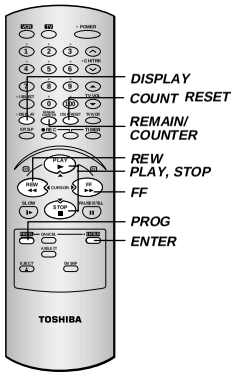

Memory Stop Feature (Zero Return)

1 On the SET UP screen, select "COUNTER MEM." using ***PLAY*** or ***STOP***, and set to "ON" using ***REW*** or ***FF***.

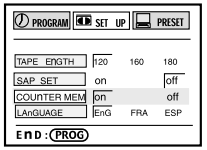

2 Press ***PROG.*** once to exit.

The memory-stop feature allows you to quickly return to a counter reading of "0H00M00S" from any point on the tape. Memory stop is automatically turned on whenever the time counter with memory is displayed on the TV screen. This is convenient when you want to watch a segment of the tape repeatedly. You may also discover other useful application for this feature.

Notes: If you are rewinding the tape and the VCR stops at "0H00M00S M", press ***REW*** again to continue rewinding.

If you press the ***FF*** (fast-forward) button and the time counter never reaches "0H00M00S M" between that point and the end of the tape, the VCR will continue to fastforward to the end of the tape.

Recording a TV Program

This section explains the basic recording operation.

Preparation
- Select the video channel (3 or 4) or video input mode on the TV.

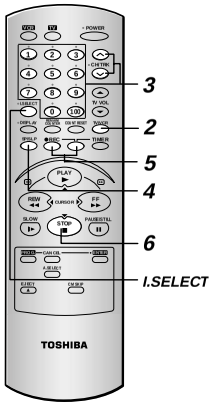

To record from other connected equipment
In step **3**, press ***I.SELECT*** to switch the display as follows:
L1: To record via the LINE IN 1 jacks on the rear panel.
L2: To record via the LINE IN 2 jacks on the front panel.

Basic Recording

1 Load a cassette with the safety tab attached.

2 Press ***TV/VCR*** so that the "VCR" indicator appears in the VCR display.

3 Select a channel to record with ***CHANNEL*** on the VCR, or ***CH/TRK*** or ***number buttons*** on the remote control.

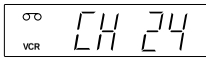

If you see "L1" or "L2" in the VCR display, press ***I.SELECT*** so that the channel number appears.
- If you record cable channels via the cable box, make the output channel number of the cable box or "L1" appear, depending on your connection. (See pages 11 – 12.)

4 Press ***SP/SLP*** to select the recording tape speed.

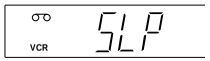

SP: Suitable for general recording with better picture and sound quality.
SLP: Suitable for tripling recording time, but with less picture and sound quality than using the SP tape speed.

5 Press ***REC*** on the VCR, or simultaneously press both ***REC*** on the remote control.
Recording starts.

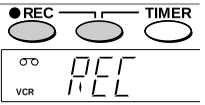

6 Press ***STOP*** to stop recording.

Watching a TV program while recording another

1) While recording, press ***TV/VCR*** to turn off "VCR" indicator.
2) Choose another channel using the channel selector on the TV.

Skipping unnecessary scenes while recording

Press ***PAUSE/STILL*** to stop recording momentarily. To resume recording, press ***PAUSE/STILL*** again.

Note
The VCR automatically shifts to the stop mode if the recording pause mode continues for 10 minutes.

Recording off time setting

By setting the recording off time, the recording stops and the VCR is turned off automatically.
While recording, press simultaneously both ***REC*** on the remote repeatedly to set the desired off time.
Each time you press ***REC***, each half-hour up to about 4 hours appear cyclically.

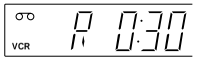

Notes
- To cancel the recording in progress, press ***POWER*** on the VCR.

Timer Program Recording

The programmable timer allows you to record up to 6 different programs over one month.

Preparation
- Select the video channel (3 or 4) or video input mode on the TV.
- Make sure that the clock is set correctly (page 15).
- Store the channels on the VCR (pages 16 and 17).

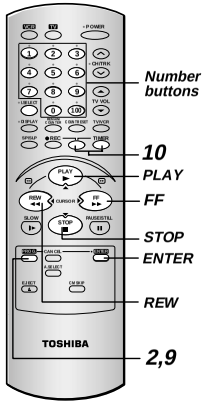

Timer Programming Procedure

Example: To record cable channel 25 in the SP tape speed from 9:20 p.m. until 10:00 p.m. on August 30. Today is August 25.

1 Load a cassette with the safety tab attached.

2 Press ***PROG***. to display the MENU screen.

3 Select "PROGRAM" using ***FF*** or ***REW***, and press ***ENTER***.

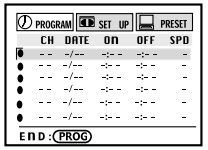

4 Move to the next using ***FF***, and select the channel number 25 by pressing ***number buttons*** 2 and 5, ***PLAY*** or ***STOP***.

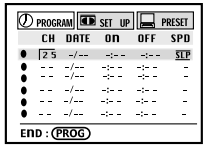

- To record a cable program from the connected cable box:
  Enter the cable channel number by ***number buttons***, ***PLAY*** or ***STOP***.
  If your cable box is not remote-controllable, choose the desired channel (1 to 125) on the cable box.

- You can make "L1" or "L2" appear on the channel number position by pressing ***I.SELECT*** depending on your connection.
  (See pages 8 and 12).

To make corrections:
Press ***REW*** to move back to the item, or ***FF*** to forward.

(Continued)

Timer Program Recording (continued)

5 Move to the next using ***FF***, and set the recording date using ***PLAY*** or ***STOP.***

The date changes as follows:

→ 8/25 → 9/25 → ··· → 7/25 → WKLYSU → ··· → MO~FR ← WKLYSA ←

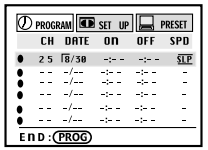

[WKLYSU]···[WKLYSA]: You can record TV programs on the same channel on the day and time every week.

[MO~FR]: You can record TV programs on the same channel on the day and time Monday through Friday.

6 Move to the next using ***FF***, and set the hour and minutes of the recording start time.

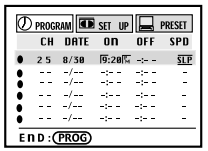

7 Move to the next, and set the recording off time.

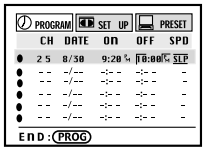

8 Move to the next, and select the tape speed (SP) using ***PLAY*** or ***STOP.***

For the tape speed "AUTO (Auto Speed Select)", see below.

To set another program, press ***FF***, and select the next line pressing ***STOP.***

Repeat steps **4** to **8.**

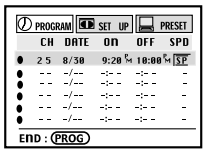

9 Press ***PROG.***.

Now programming is completed.

10 Press both ***TIMER*** simultaneously.

The power turns off and the VCR enters the timer standby mode.

Auto Speed Select

If you are not sure the tape is long enough for timer program recording in the SP tape speed, set the recording tape speed to "AUTO".

Recording starts in the SP tape speed and the VCR automatically selects the tape speed to record the program to the end. If the tape length is not long enough, the tape speed automatically changes from SP to SLP.

Notes

- Make sure that the tape length is selected correctly according to the tape used on the SET UP screen (page 22).
- When the SLP tape speed is selected and the tape length is not sufficient to record the program to the end, the program cannot be recorded to the end.
- The picture will be distorted when playing the part where the recording tape speed is switched from SP to SLP with the Auto Speed Select feature.

Confirming the timer programs

Press ***PROG.*** during timer recording mode.

The screen for confirming will appear.

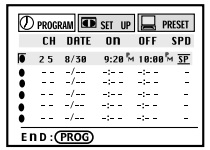

Press ***PROG***. again to exit from confirmation page.

Changing / cancelling the timer programs

1) If the TIMER indicator is lit , press both TIMER to turn it off and then turn the VCR on by pressing VCR ***POWER.***

2) With steps **2** to **9**, change the items.

To cancel a program, select the program you want to cancel in step **4**, and press ***CANCEL.*** The line is then cleared.

3) Press both ***TIMER*** to return to the timer standby mode .

Error indication

The "--E-" (Error) indicator appears in the VCR display if you press both ***TIMER*** when:

— a cassette is not loaded.

— the loaded cassette has no safety tab.

— timer recording is in progress.

In these cases, a recording can not be made.

To cancel the Timer Recording

By pressing the ***POWER*** button on the front panel of the VCR, it will cancel the timer recording and go to standby.

If a power failure occurs during the timer program recording

- When a power failure has occurred, the programmed contents are not affected, reset the clock.

Overlaps of the programs

If two timer programs overlap, the recording start time of program 1 has priority over the recording off time of program2.

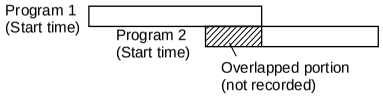

MTS Broadcast Compatibility

This VCR can receive or record MTS (Multichannel TV Sound) broadcasts. By connecting the VCR to your stereo system or stereo TV, you will experience the SAP or stereo sound.

Preparation
Connect a stereo TV or stereo system to the AUDIO OUT jacks of the VCR.

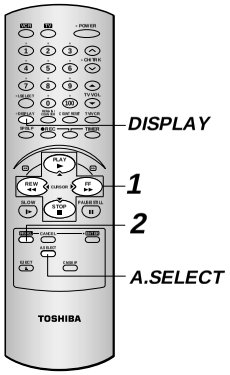

Recording the SAP/Stereo Broadcast

1 On the SET UP screen (page 14), select "SAP SET" using ***PLAY*** or ***STOP***, and set to "ON" using ***REW*** or ***FF***.

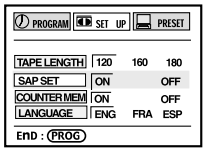

2 Press ***PROG***. once to exit.

3 Perform a recording.

SAP (Second Audio Program broadcast):
A separate audio program, usually broadcast in a second language with the main language.

Selecting a sound

Sounds recorded on the tape
According to your setting of "SAP SET" on the SET UP screen, the sound is recorded onto different tracks of the tape as below. Set "SAP SET" to "ON" or "OFF" appropriately.

Type of receiving broadcast	Setting of "SAP SET" on the SET UP screen	On-Screen Display (Press ***DISPLAY***.)		Contents of recorded sound		
				Normal sound track (Mono)	Hi-Fi sound track	
		"SAP"	"STEREO"		L	R
Regular (monaural audio)	"ON" or "OFF"	not lit	not lit	MONO	MONO	MONO
Stereo	"ON" or "OFF"	not lit	lit	MONO (MIXED)	STEREO	
Regular+SAP	"ON"	lit	not lit	MONO	MONO	SAP
	"OFF"	lit	not lit	MONO	MONO	MONO
Stereo+SAP	"ON"	lit	lit	MONO	MONO	SAP
	"OFF"	lit	lit	MONO (MIXED)	STEREO	

Sounds in playback
You can play SAP and/or stereo broadcast with this VCR. Press **A.SELECT** to select a desired sound.

Desired sound	L , R indicator in the On-Screen Display	Sound Output
SAP Sound	R (right) is on	SAP
Stereo Sound	Both R (right) and L (left) are on	HIFI Sound

Note
When the TV is connected to the RF OUT terminal of the VCR, the output sound is monaural.

Remote Control for TOSHIBA TVs

The remote control can control TOSHIBA TVs.

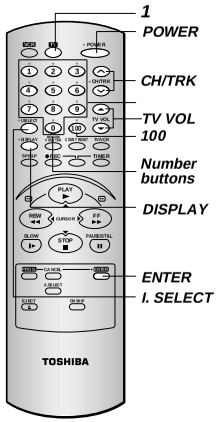

TOSHIBA TV's Control

1 Press ***TV*** to set the remote control operating your TV.

2 Point the remote control at your TV and use each button listed below to make sure that your TV is operate correctly.

POWER	To turn the TV on or off.
CH/TRK	To select TV channels in the upper or lower direction.
TV VOL	To adjust the sound level.
I.SELECT	To select an external source such as a VCR.
Number buttons	To select TV channels. When selecting channels 1 to 9, first enter 0 and then the desired number.
100	To substitute for 100 channel key.
DISPLAY	To turn on or off TV's screen display.
ENTER	To use for the TV's ENTER key.

Important
Some TVs may not respond to all the operations above, or may not be operated at all with this remote control. In this case, operate your TV with it's own remote control.

Before Calling Service Personnel

Check the following symptoms before requesting servicing.

No power.

- The power cord is not plugged in.
  - **Plug the power cord into the outlet firmly.**

Although the power is on, the VCR will not work.

- There is no cassette.
  - **Load a cassette. (page 18)**

The clock does not work.

- There has been a power failure.
  - **Reset the clock. (page 15)**

The timer does not work properly.

- The time is incorrect.
  - **Set the clock correctly. (page 15)**

The picture does not appear on the TV screen.

- The video channel or video input mode is not set correctly.
  - **Set the TV channel to the video channel (3 or 4) or set the video input mode on the TV. (page 11)**
- The TV signal is weak.
  - **Adjust the antenna direction or use an optional antenna booster.**
- The power cord is not plugged in.
  - **Plug the power cord into the outlet firmly.**

The picture does not appear on the TV screen during recording and playback.

- The video channel or VCR mode is not set correctly.
  - **Press *TV/VCR* to select the VCR mode and set the TV channel to 3 or 4. (pages 11, 12)**

The VCR does not record.

- The loaded cassette has no safety tab.
  - **Use a cassette with a safety tab or cover the hole with adhesive tape. (page 18)**

The playback picture is poor.

- Tracking is not set appropriately.
  - **Adjust the tracking manually. (page 19)**
- The video heads are dirty.
  - **Clean the video heads with a commercially available cleaning tape.**

The desired sound is not heard, such as SAP, stereo, or regular sound.

- Setting of sounds is not correct.
  - **Select a desired sound using A.SELECT. (page 28)**

Noise is present in the Hi-Fi sound being played.

- Tracking is not set appropriately.
  - **Adjust the tracking manually. (page 19)**

The timer recording function does not work.

- There is an error in programming.
  - **Reset the timer recording program. (page 27)**
- There is no cassette in the VCR.
  - **Load a cassette with the safety tab attached. (page 18)**
- The cassette does not have the safety tab.
  - **Use another cassette with a safety tab or cover the hole with adhesive tape. (page 18)**
- The timer indicator is not displayed.
  - **Press both *TIMER* simultaneously. (page 26)**
- There has been a power failure.
  - **Reset the clock. (page 15)**

The remote control does not work properly.

- The batteries are exhausted.
  - **Replace all batteries. (page 10)**
- The remote control is operated beyond the operating range.
  - **Make sure the remote control is within 30° of the remote sensor on the VCR. (page 10)**
- Too far from the VCR.
  - **Use the remote control within 7 m from the front of the VCR. (page 10)**
- An obstacle may be in the way of the operation.
  - **Remove the obstacle.**
- The operating mode of the remote control is not set correctly.
  - **Press *VCR* or *TV* depending on the equipment you want to operate. (pages 14, 29)**

The cassette is ejected immediately after it is loaded.

- The cassette was inserted with the label side not paralleling the compartment.
  - **Reload it carefully. (page 18)**

The cassette does not go into the cassette compartment.

- There is already a cassette in the VCR.
  - **Eject the cassette and reload the new one. (page 18)**

2-2 IC Blocks

2-2-1 IC301 (LA71201M)

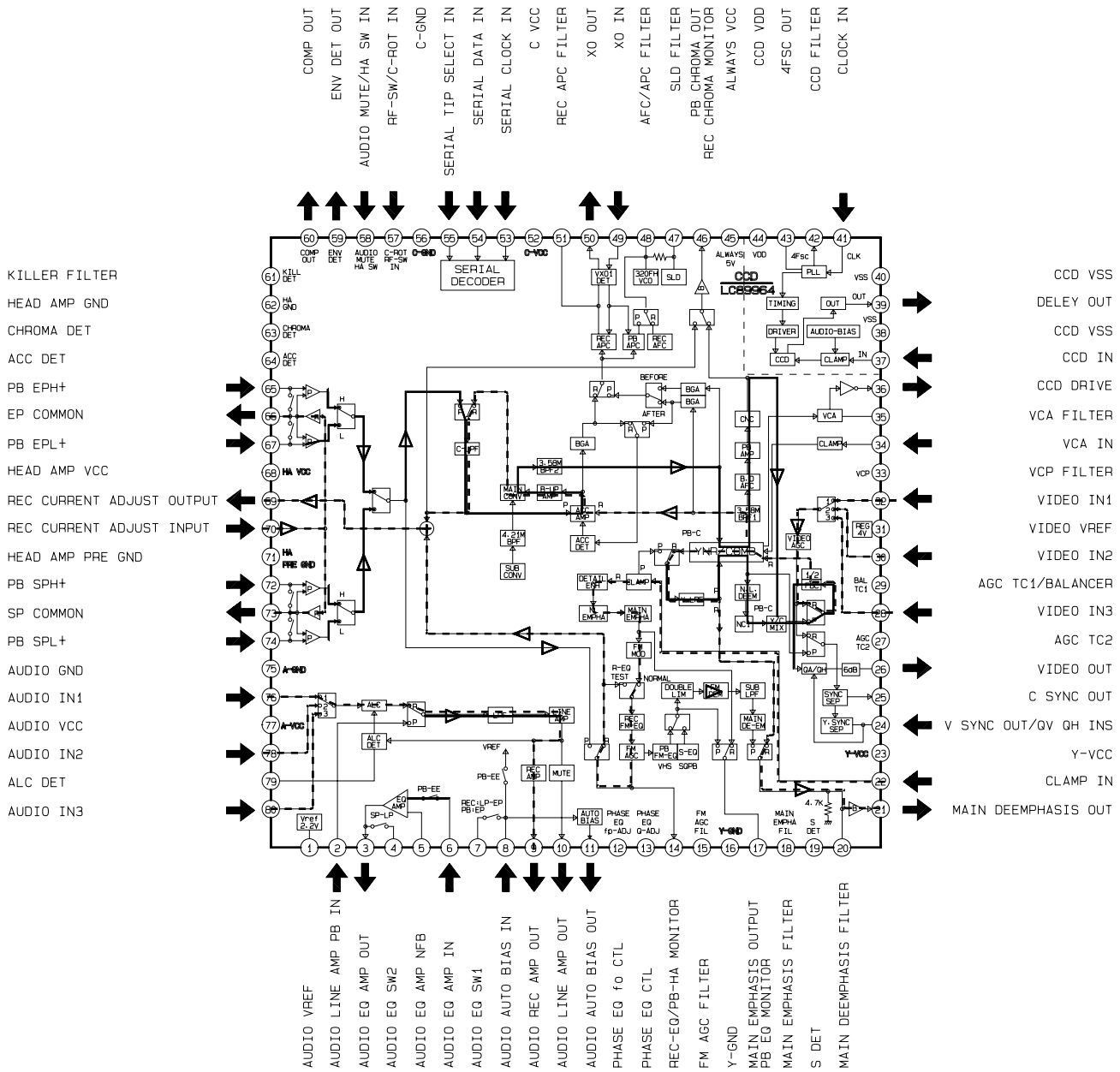

2-2-2 IC501 (AN3663FBP)

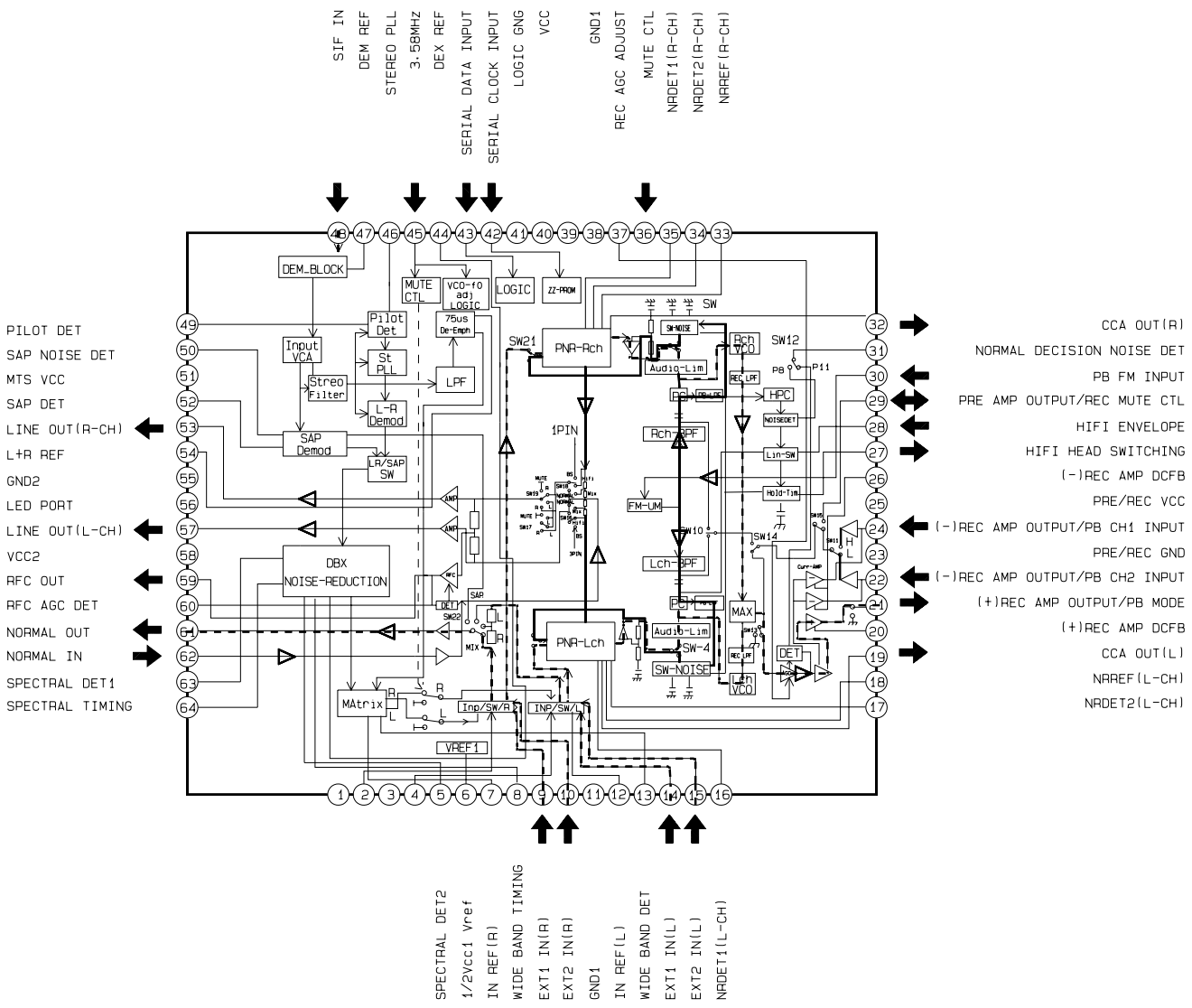

2-2-3 IC601 (MN101D02D)

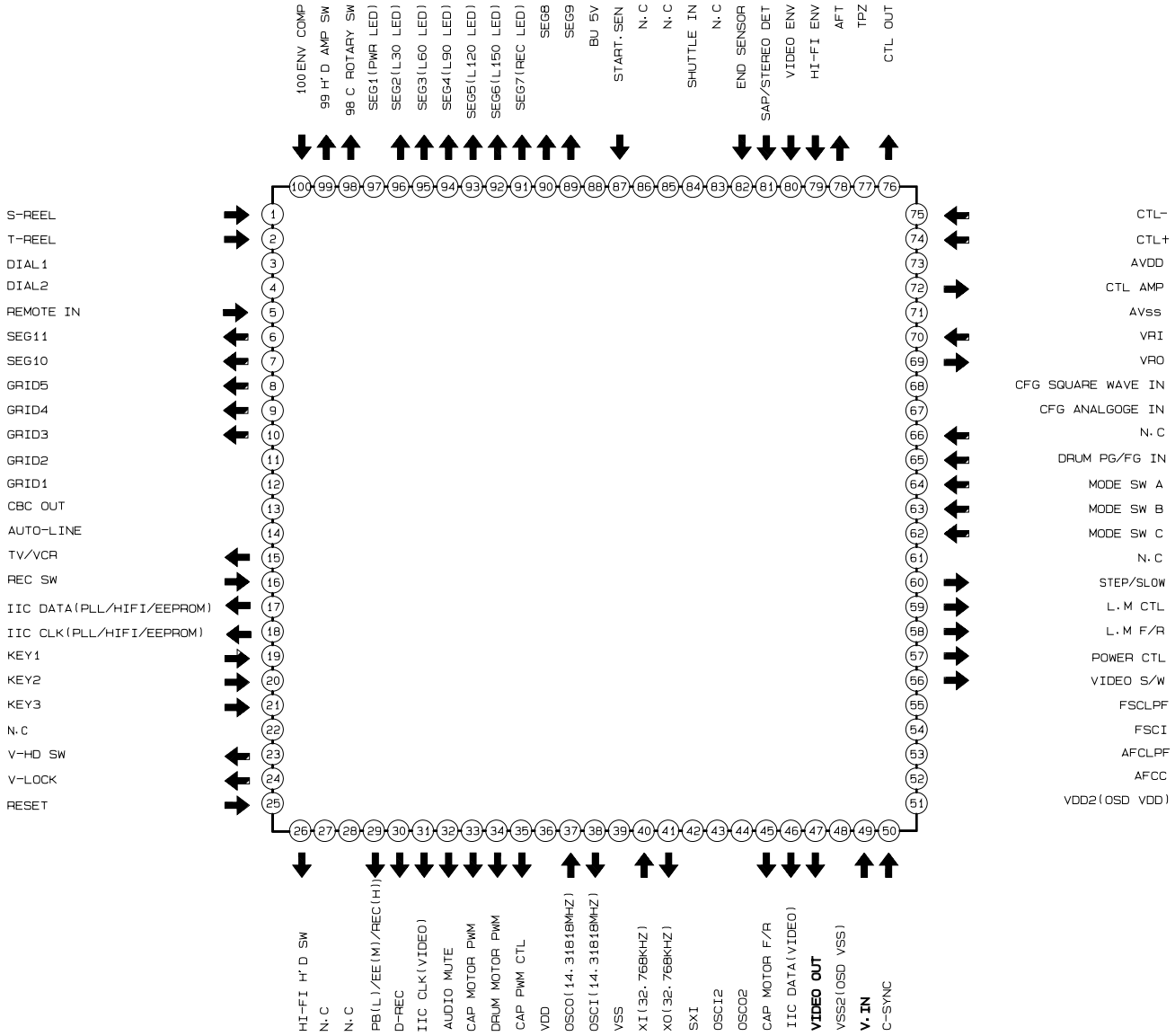

3. Product Specifications

Specifications and features are subject to change without notice.

OPERATION	DESCRIPTION
Power supply	120V AC, 60Hz
Power consumption	18W
External dimensions	430 x 94 x 252 mm (W.H.D)
Mass	3.0 kg
Channels received	VHF : Channels 2-13 UHF : Channels 14-69 CATV : Channels A7-A1, A-CCC, 66-125
Antenna input/output terminals	UHF/VHF : 75ohm F type connector
Signal system	Standard NTSC
Recording/Playback system	Recording : VHS format (SP, SLP) Playback : VHS format (SP, LP, SLP)
Cassette	Video cassette with VHS mark
Tape speed	SLP : 11.1 mm/s, SP : 33.4 mm/s
Video recording/Playback time	SLP : 480 minutes, SP : 160 minutes (When T-160 video cassette is used.)
Fast forward/Rewind time	Within approx. 60 s (When T-120 video cassette is used.)
Video input	1V(p-p), 75 ohm, unbalanced, negative sync., pin jack
Video output	1V(p-p), 75 ohm, unbalanced, negative sync., pin jack
Audio input	Line input : 308 mV(rms), more than 47 Kohm, pin jack
Audio output	Line input : 308 mV(rms), less than 4.7 Kohm, pin jack
Audio frequency range(Hi-Fi)	20Hz - 20KHz
Audio dynamic range(Hi-Fi)	68dB
Utilization conditions	Temperature : 5°C to 40°C Humidity : less than RH 80%

4. Disassembly and Reassembly

4-1 Cabinet Assembly

4-1-1 Cabinet Top Removal

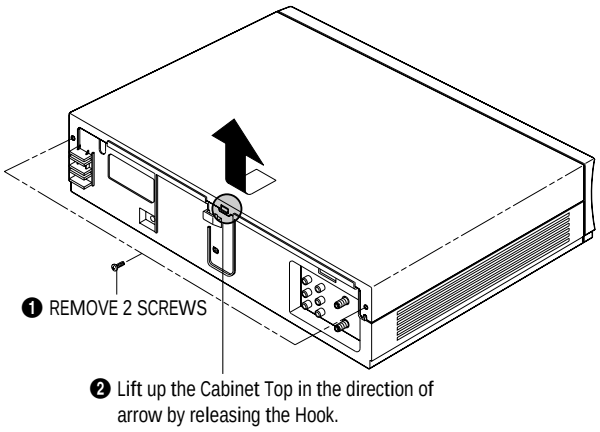

Fig. 4-1 Cabinet Top Removal

4-1-2 Ass'y Front Panel Removal

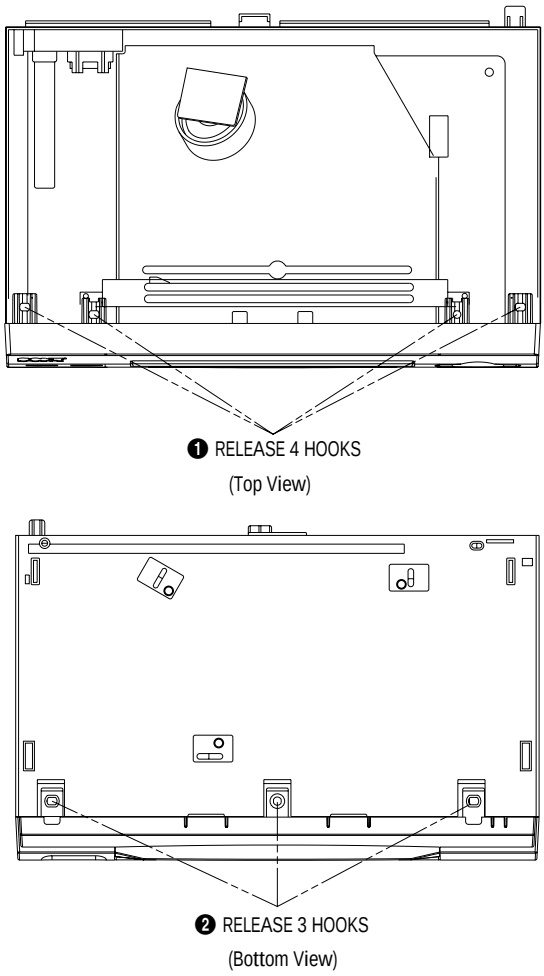

Fig. 4-2 Ass'y Front Panel Removal

4-1-3 Ass'y Function A/B Removal

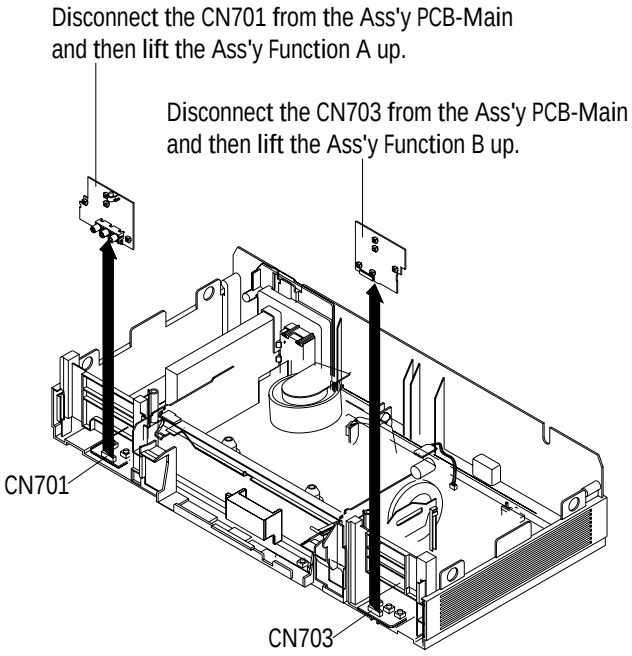

Fig. 4-3 Ass'y Function A/B Removal

4-1-4 Chassis Removal

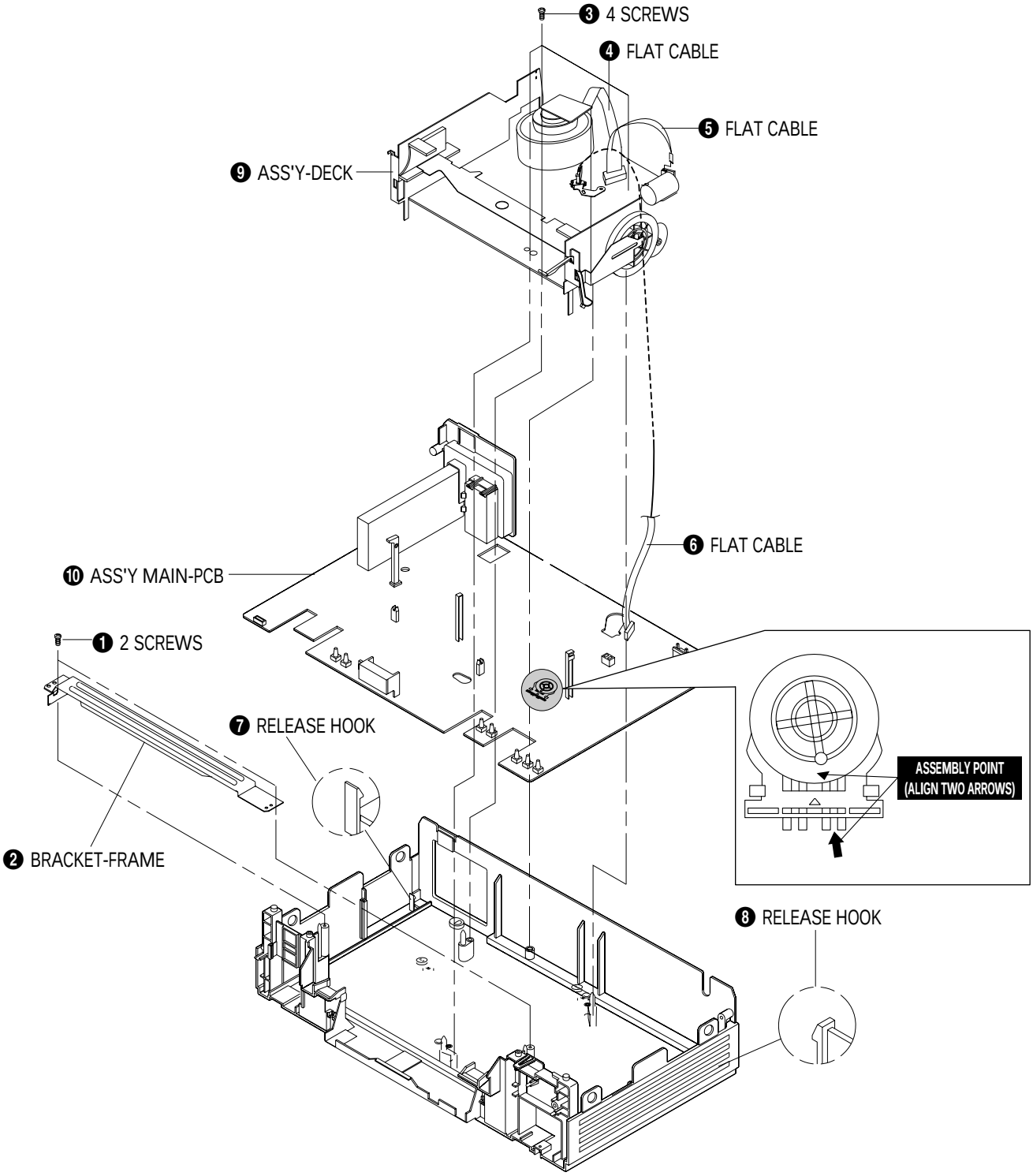

Fig. 4-4 Chassis Removal

4-2 Deck Parts Locations

4-2-1 Top View

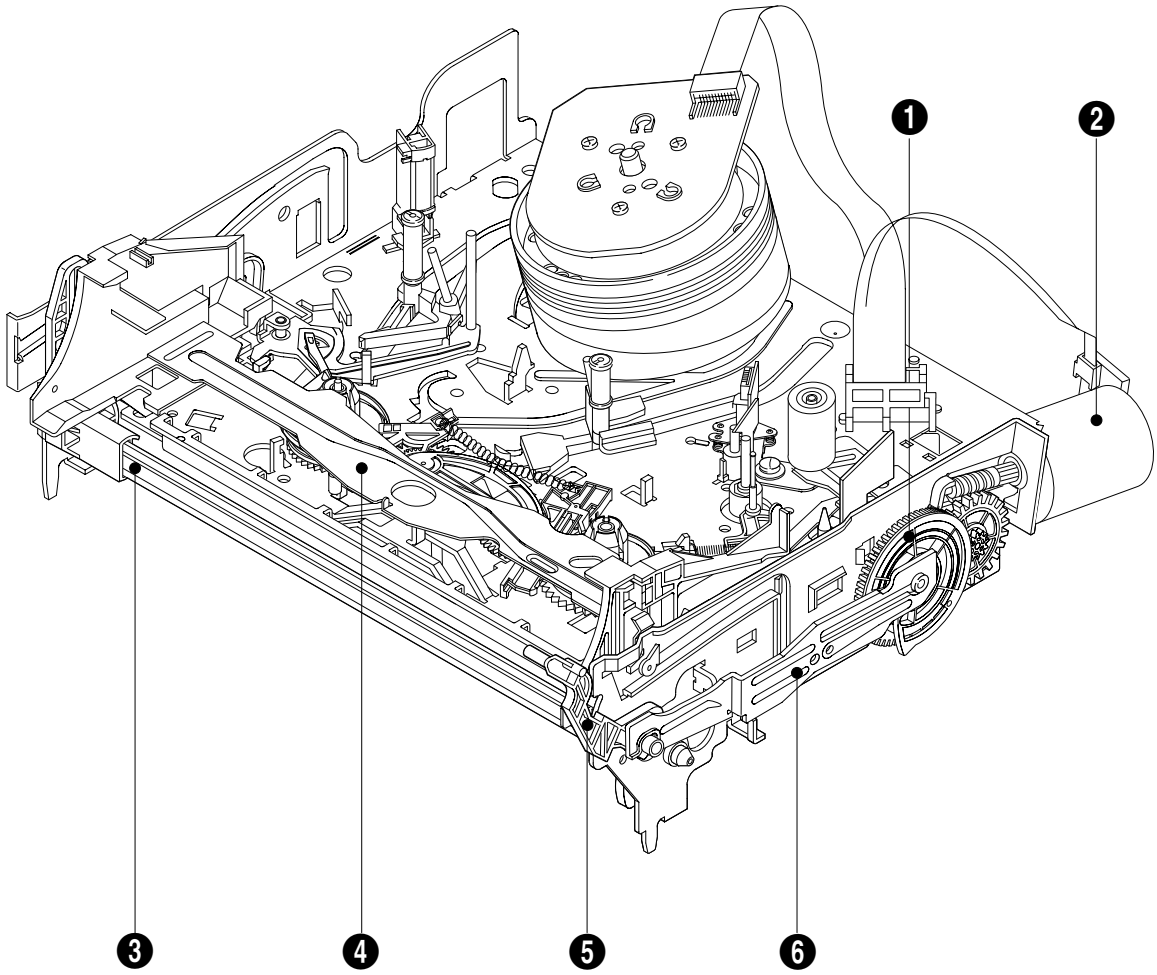

Fig. 4-5 Top parts Location-1

❶ GEAR FL CAM
❷ MOTOR LOADING ASS'Y
❸ LEVER FL ARM ASS'Y
❹ HOLDER FL CASSETTE ASS'Y
❺ LEVER FL DOOR
❻ SLIDER FL DRIVE

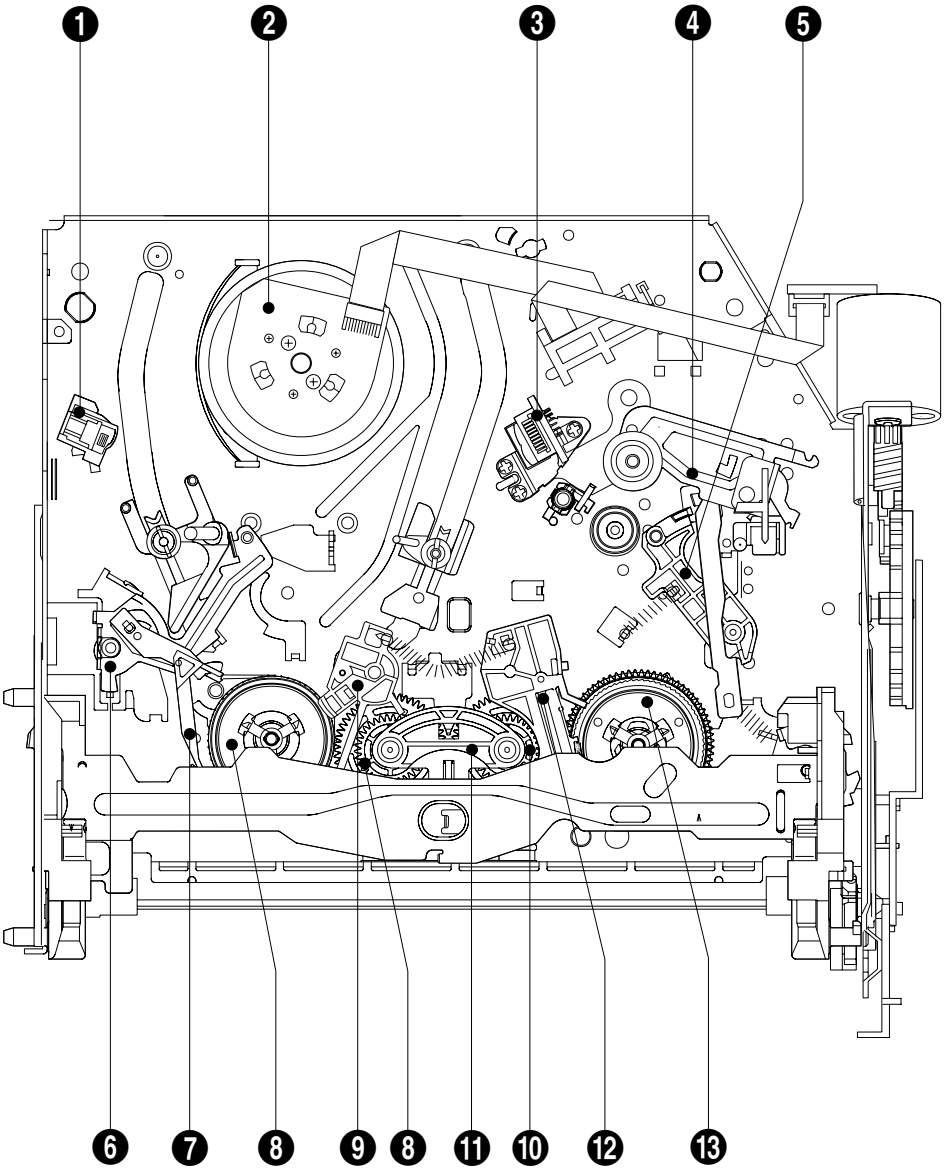

Fig. 4-6 Top Parts Location-2

❶ FE HEAD
❷ CYLINDER ASS'Y
❸ ACE HEAD ASS'Y
❹ LEVER UNIT PINCH ASS'Y
❺ LEVER #9 GUIDE ASS'Y
❻ LEVER TENSION ASS'Y
❼ BAND BRAKE ASS'Y
❽ DISK S REEL
❾ LEVER S BRAKE ASS'Y
❿ GEAR IDLE
⓫ LEVER IDLE
⓬ LEVER T BRAKE ASS'Y
⓭ DISK T REEL

1-1-2 Bottom View

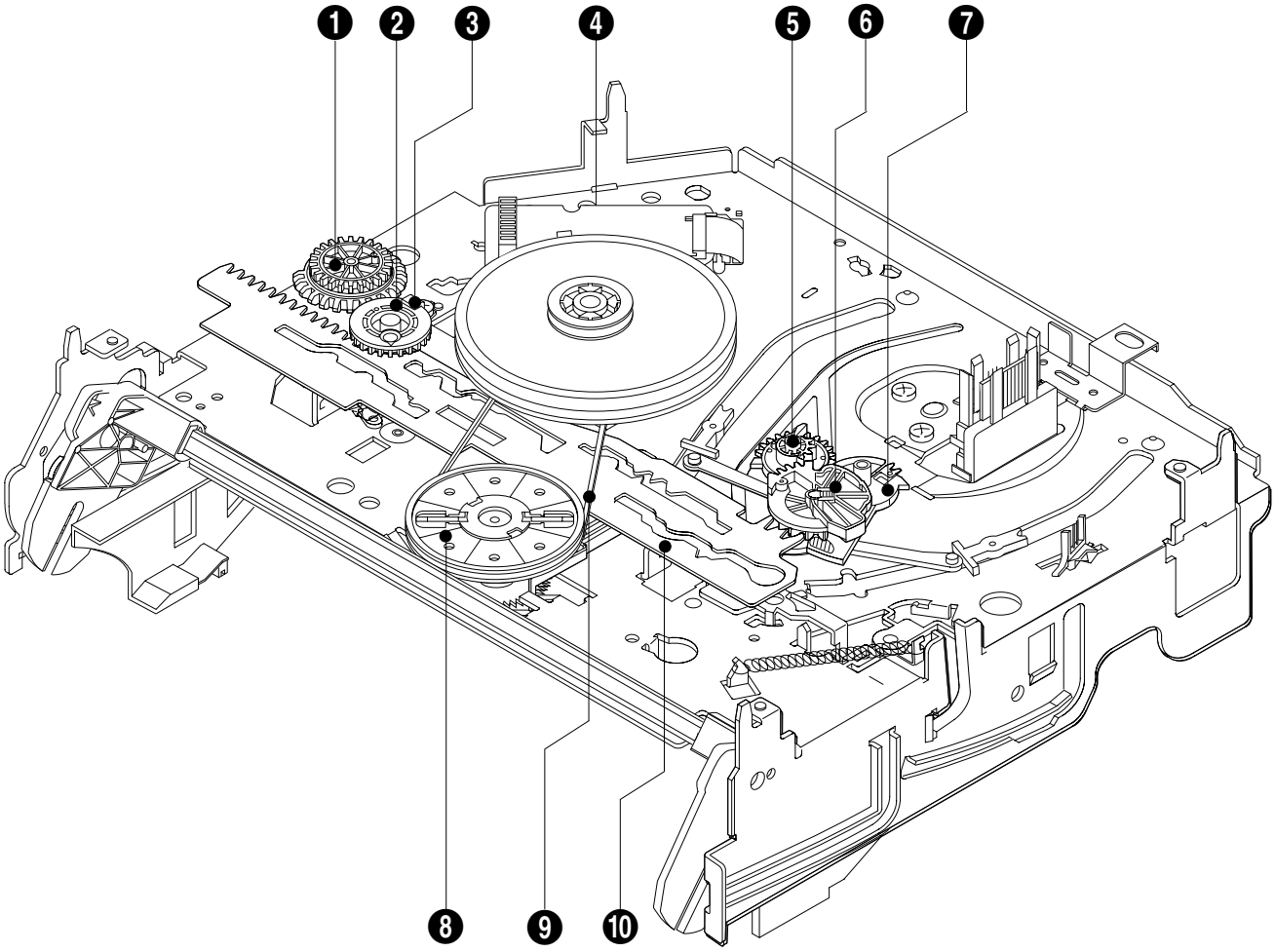

Fig. 4-7 Bottom Parts Location

❶ GEAR JOINT 1
❷ GEAR JOINT 2
❸ BRACKET GEAR
❹ MOTOR CAPSTAN ASS'Y
❺ LEVER T LOAD ASS'Y
❻ GEAR LOADING DRIVE
❼ LEVER S LOAD ASS'Y
❽ HOLDER CLUTCH ASS'Y
❾ BELT PULLEY
❿ SLIDER CAM

1-2 Main Deck

1-2-1 Holder FL Cassette Ass'y Removal

1) Pull the Holder FL Cassette Ass'y ❶ to the eject position.
2) Pull the Holder FL Cassette Ass'y ❶ as grasping the Holder FL Cassette Ass'y ❶ and Lever FL Cassette-R ❷ in the same time to release hooking from Main Base until the Boss [A] of Holder FL Cassette Ass'y ❶ is taken out from the Rail [B].
3) Lift the Holder FL Cassette Ass'y ❶, in this time, you have to grasp the Lever FL Cassette-R ❷ Continuously until the Holder FL Cassette Ass'y ❶ is taken out completely.

Note : Be sure to insert Lever FL Cassette-R ❷ in the direction of "A" to prevent separation and breakage of the Lever FL Cassette-R ❷ at disassembling and reassembling.

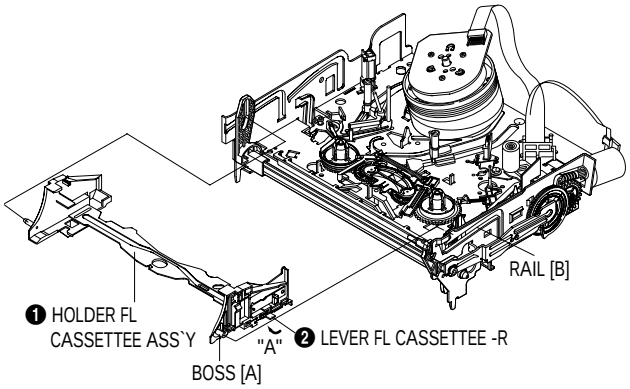

Fig. 4-8 Holder FL Cassette Ass'y Removal

1-2-2 Lever FL Door Removal

1) Release the Hook ❷ and Remove the Lever FL Door ❶ in the direction of arrow "B".

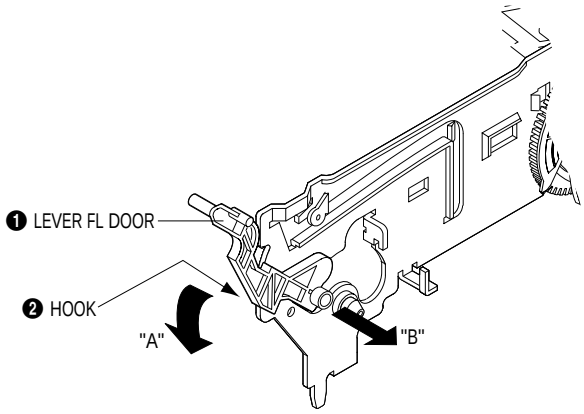

Fig. 4-9 Lever FL Door Removal

1-2-3 Slider FL Drive, Gear FL Cam Removal

1) Pull the Slider FL Drive ❶ to the front direction.
2) Remove the Slider FL Drive ❶ in the direction of arrow. (Refer to Fig. 4-10)
3) Remove the Gear FL cam ❷.

Note : When reinstalling be sure to reassemble Slider FL drive ❶ after you insert the Boss of Lever FL ARM-R in Groove of Slider Fl drive ❶.

Assembly : Align the Gear FL Cam ❶ with the Gear worm wheel Post as shown drawing.
(Refer to Timing point)

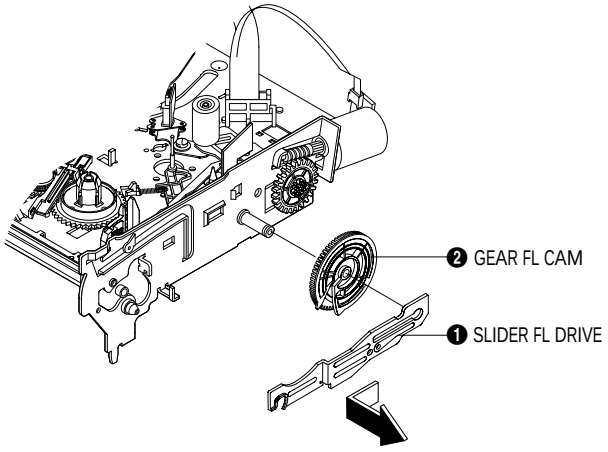

Fig. 4-10 Slider FL Drive Removal

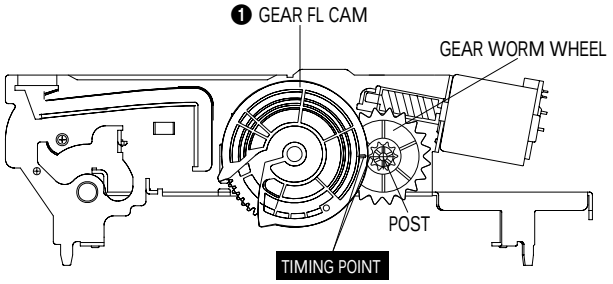

Fig. 4-11 Gear FL Cam, Gear Worm

1-2-4 Lever FL Arm Ass'y Removal

1) Push the hole "A" in the direction of arrow "B" use the pin.(about Dia. 2.5)
2) Pull out the Lever FL Arm Ass'y ❶ from the Boss of Main Base.
3) Remove the Lever FL Arm Ass'y ❶ in the direction of arrow "C".

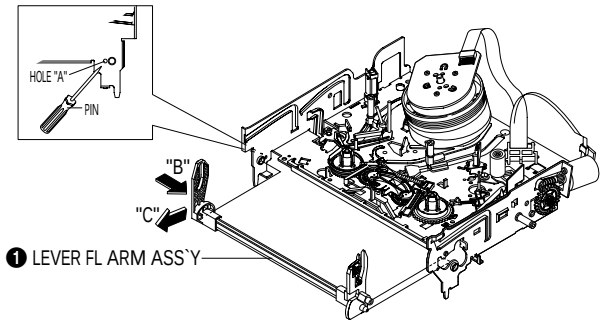

Fig. 4-12 Lever FL Arm Ass'y Removal

1-2-5 Gear Worm Wheel Removal

1) Remove the Gear Worm wheel ❶.

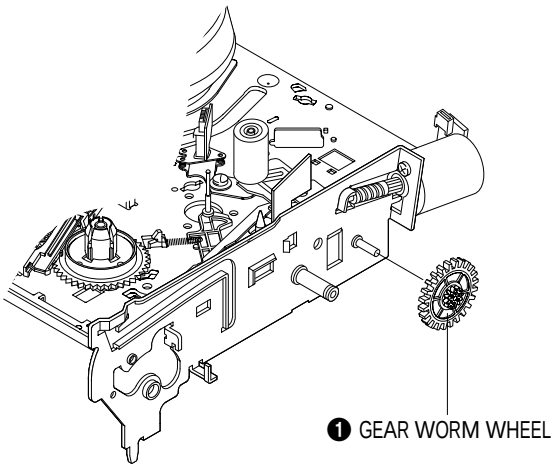

Fig. 4-13 Gear Worm Wheel Removal

1-2-6 Cable Flat Removal

1) Remove the Drum connecting part of Cable Flat ❶ from Connector Waffer ❷.
2) Remove the Loading Motor connecting part of Cable Flat ❶ from Connector Waffer ❸.
3) Rotate the Damper Capstan ❹ in the direction of arrow "A" and remove it toward "B".
4) Pull the Cable Flat ❶ in the direction of arrow "C" to remove.

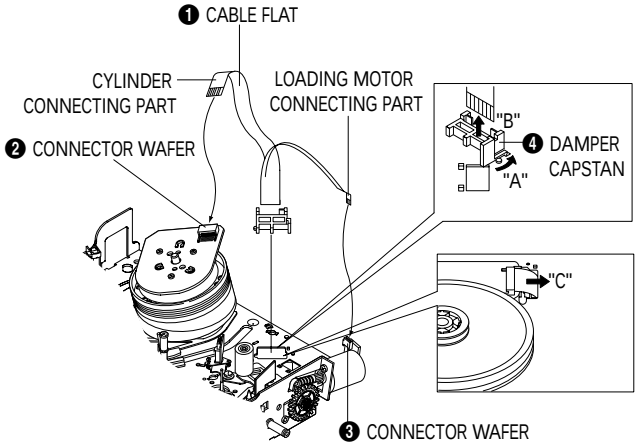

Fig. 4-14 Cable Flat Removal

1-2-7 Motor Loading Ass'y Removal

1) Remove the screw ❶.
2) Remove the Motor Loading Ass'y ❷.

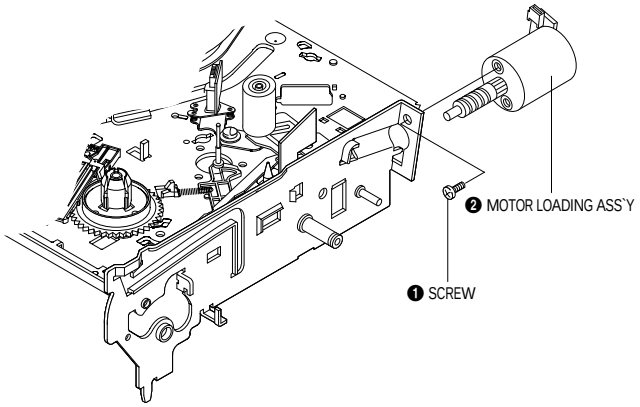

Fig. 4-15 Motor Loading Ass'y Removal

1-2-8 Bracket Gear, Gear Joint 2, 1 Removal

1) Remove the SCREW ❶.
2) Remove the Bracket Gear ❷.
3) Remove the Gear Joint 2 ❸.
4) Remove the Gear Joint 1 ❹.

Assembly :
1) Be sure to align dot mark of Gear Joint 1 ❶ with dot mark of Gear Joint 2 ❷ as shown Fig 4-17. (Refer to Timing point1)
2) Confirm the Timing Point 2 of the Gear Joint 2 ❷ and Slider Cam ❸.

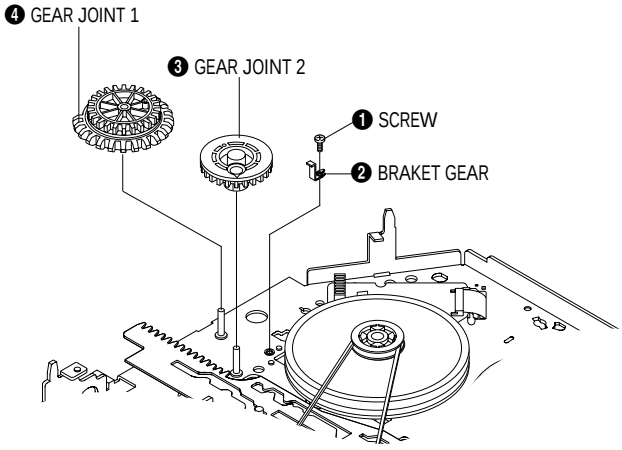

Fig. 4-16 Bracket Gear, Gear Joint 1,2 Removal

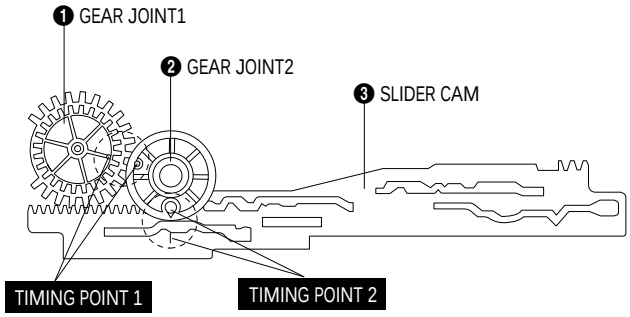

Fig. 4-17 Gear Joint 1,2 Assembly

1-2-9 Gear Loading Drive, Slider Cam, Lever Load S, T Ass'y Removal

1) Remove the Belt Pulley. (Refer to Fig. 4-35)
2) Remove the Gear Loading Drive ❶ after releasing Hook [A] in the direction arrow as shown in detail drawing.
3) Remove the Slider Cam ❷.
4) Remove the Lever Load ❸, Link Load ❺ & Lever Load ❹, Link Load ❻.

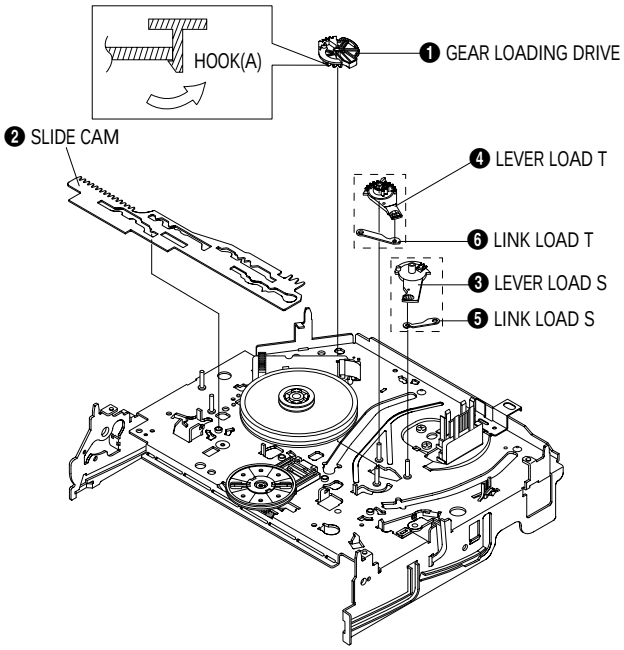

Fig. 4-18 Gear Loading Drive, Slider Cam, Lever T, S Load Ass'y Removal

1-2-10 Gear Loading Drive, Slider Cam, Lever Load S, T Ass'y Assembly

1) When reinstalling, be sure to align dot of Lever Load T Ass'y ❶ with dot of Lever Load S Ass'y ❷ as shown in drawing, (Refer to Timing Point 1).
2) Insert the Pin A,B,C,D into the Slider Cam ❸ hole,
3) Be sure to align dot of Lever Load T ❶ and dot of Gear Loading Drive ❹, (Refer to Timing Point 2).
4) Aline dot of Gear Loading drive ❹ with mark of Slider Cam ❸ as shown in drawing(Refer to Timing Point 3).

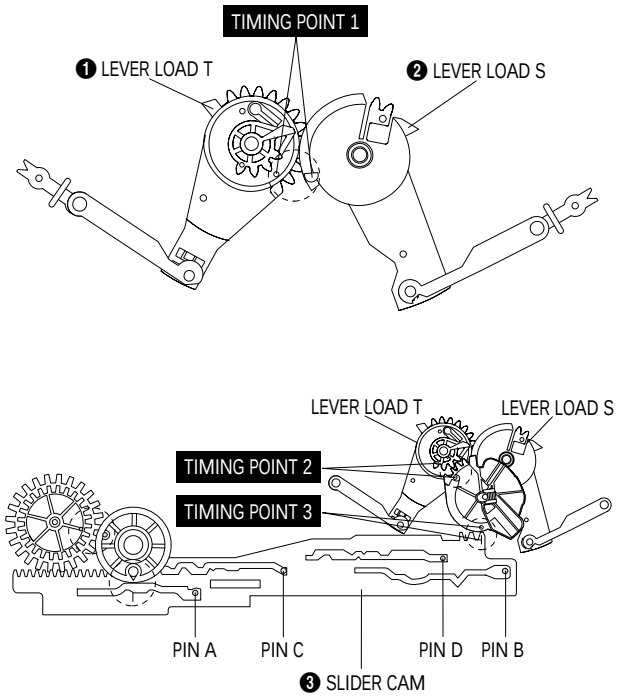

Fig. 4-19 Gear Loading Drive, Slider Cam, Lever Load S, T Ass'y Assembly

1-2-11 Lever Pinch Drive, Lever Tension Drive Removal

1) Remove the Lever Pinch Drive ❶, Lever Tension Drive ❷.

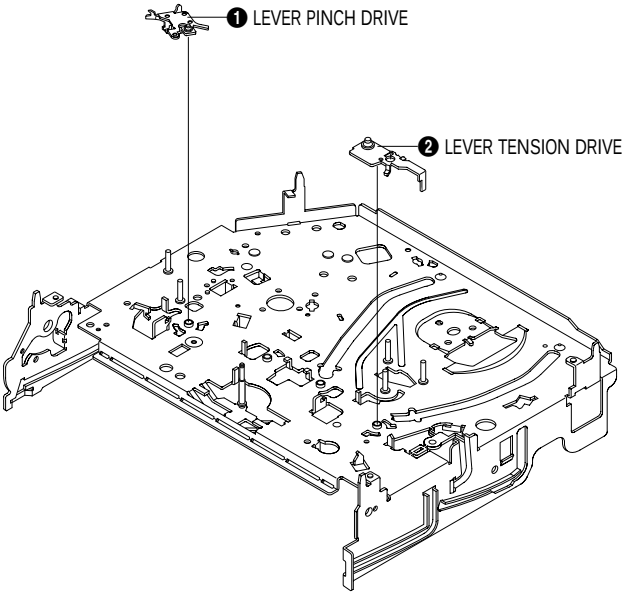

Fig. 4-20 Lever Pinch Drive, Lever Tension Drive Removal

1-2-12 Lever Tension Ass'y, Band Brake Ass'y Removal

1) Remove the Lever Brake S Ass'y (Refer to Fig 4-22)
2) Remove the Spring Tension Lever ❶.
3) Rotate stopper of Main Base in the direction of arrow "A".
4) Lift the Lever Tension Ass'y ❷ & Band brake Ass'y ❸.

Note :
1) When replacing the Lever Tension Ass'y ❷, be sure to apply Grease on the post,
2) Take care not to touch stain on the felt side, and not to be folder and broken Band brake Ass'y
3) After Lever Tension Ass'y seated, Rotate stopper of Main Base to the Mark[B].

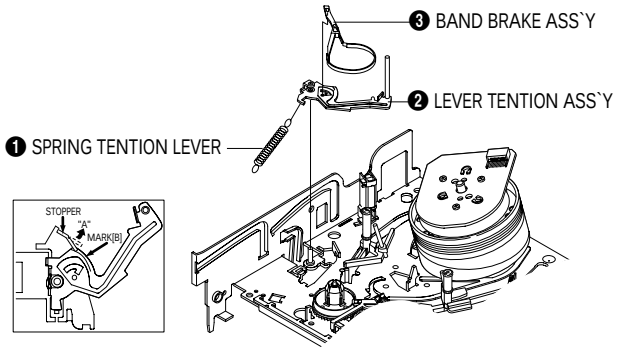

Fig. 4-21 Lever Tension Ass'y, Band Brake Ass'y Removal

1-2-13 Lever Brake S, T Ass'y Removal

1) Release the Hook [A] and the Hook [B], [C] in the direction of arrow as shown in Fig 4-22.
2) Lift the Lever S, T Brake Ass'y ❶, ❷ with spring brake ❸.

Assembly :
1)Assembly the Lever S Brake Ass'y ❶ on the Main Base.
2)Assembly the Lever T Brake Ass'y ❷ with spring brake ❸.

Note : Take extreme care not to be folded and transformed Spring Brake at removing or reinstalling.

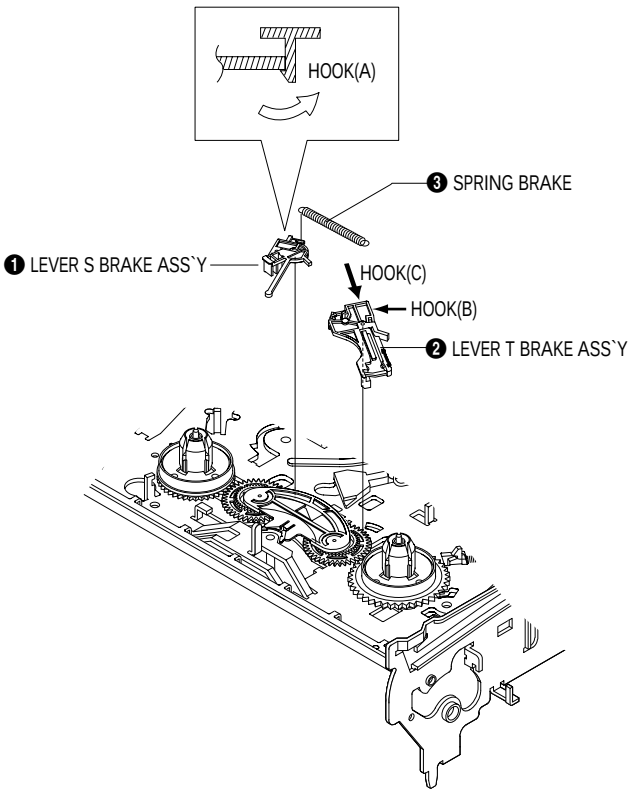

Fig. 4-22 Lever Brake S, T Ass'y Removal

1-2-14 Gear Idle Ass'y Removal

1) Push the Lever Idle ❶ in the direction of arrow "A", "B".
2) Lift the Lever Idle ❶.

Assembly :
1) Apply oil in two Bosses of Lever Idle ❶.
2) Assemble the Gear Idle ❷ with the Lever Idle ❶.

Note : When replacing the Gear Idle ❷, be sure to add oil in the boss of Lever Idle ❶.

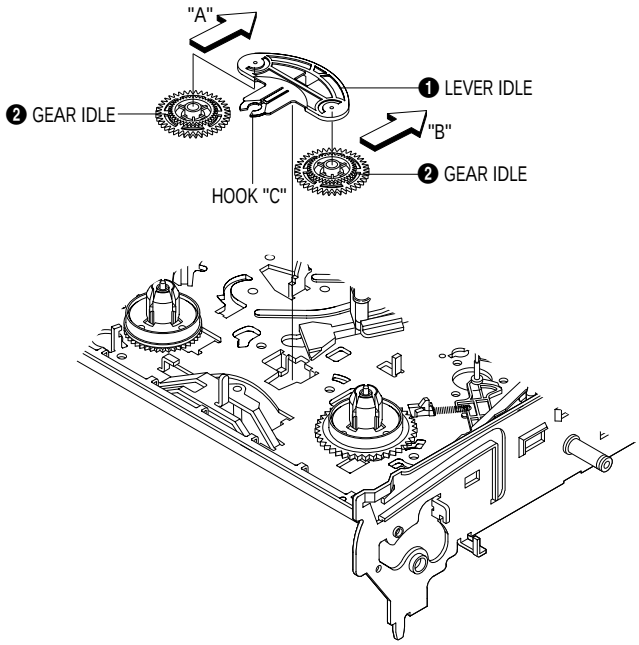

Fig. 4-23 Gear Idle Ass'y Removal

1-2-15 Disk S, T Reel Removal

1) Lift the Disk S, T Reel ❶, ❷.

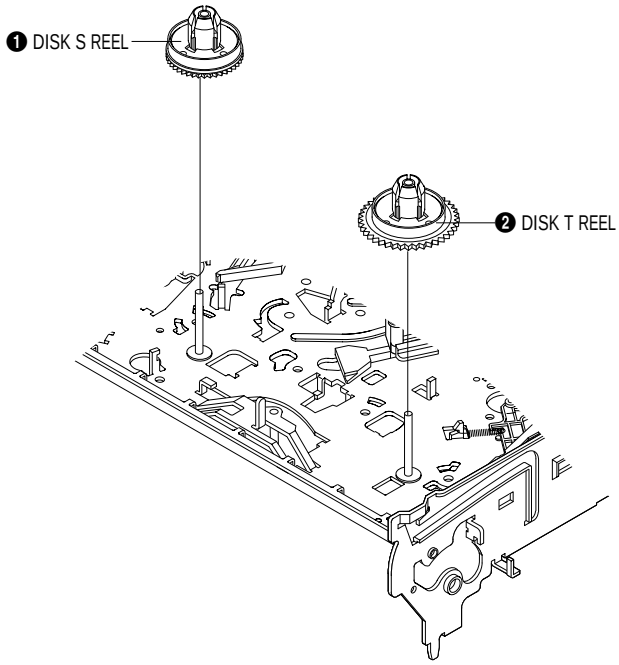

Fig. 4-24 Disk S, T Reel Removal

1-2-16 Holder Clutch Ass'y Removal

1) Remove the Washer Slit ❶.
2) Lift the Holder Clutch Ass'y ❷.

Note : When you reinstall Holder Clutch Ass'y
1) Check the condition of spring as shown in detail A.
2) Don't push Holder Clutch Ass'y down with excessive force Just insert Holder Clutch Ass'y into post center with dead force and Rotate it smoothly.
   Be sure to confirm that spring is in the slit of Gear Center Ass'y as shown in detail B.

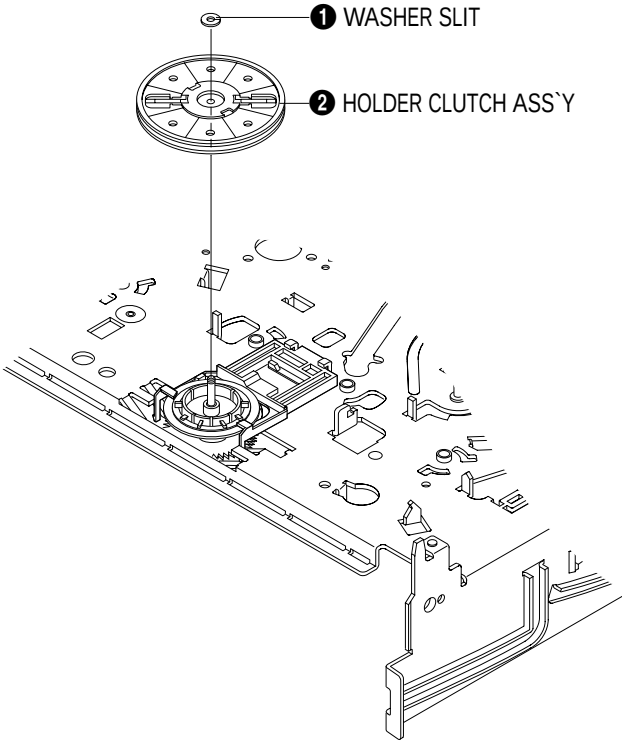

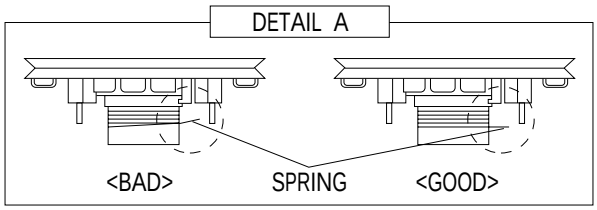

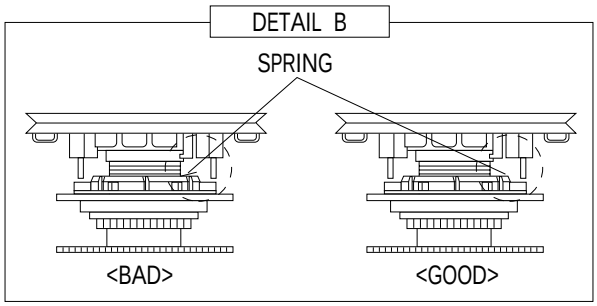

Fig. 4-25 Holder Clutch Ass'y Removal

1-2-17 Lever Up Down Ass'y, Gear Center Ass'y Removal

1) Remove the 2 hooks in the direction of arrow as shown Fig. 4-26 and lift the Lever Up Down Ass'y ❶.
2) Lift the Gear Center Ass'y ❷.

Assembly :
1) Insert the Lever Up Down Ass'y ❶ in the rectangular holes on Main Base as shown in Fig 4-27.
2) Lift the Lever Up Down Ass'y ❶ about 35°. (Refer to Fig 4-27)
3) Insert Ring of the Gear Center Ass'y ❷ in the Guide of the Lever Up Down Ass'y ❶.
4) Insert the Gear Center Ass'y ❷ in the post on Main Base.
5) Push down the Lever Up Down Ass'y ❶ for locking of the Hook.

Note :
1) Take care not to separate and sentence does not mark sense.
2) Be sure to confirm that Ring of the Gear Center Ass'y ❷ is in the Guide of the Lever Up Down Ass'y ❶ after finishing assembly of Lever Up Down Ass'y ❶ and Gear Center Ass'y ❷.

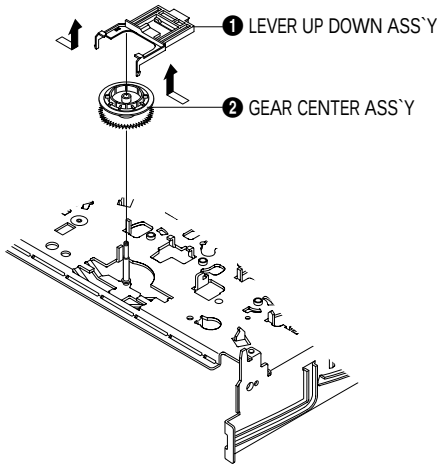

Fig. 4-26 Lever Up Down Ass'y Removal

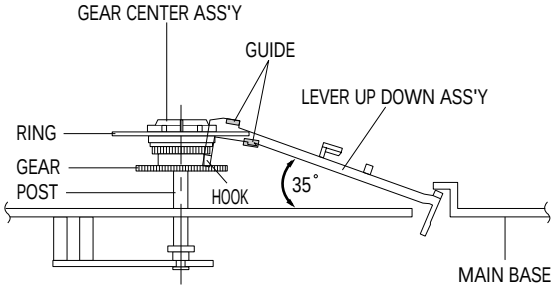

Fig. 4-27 Lever Up Down Ass'y Removal

1-2-18 Guide Cassette Door Removal

1) Lift the Hook [A].
2) Rotate the Guide Cassette Door ❶ in the direction of arrow.

Note : After reinstalling the Guide Cassette Door ❶ sure the Hook [A].

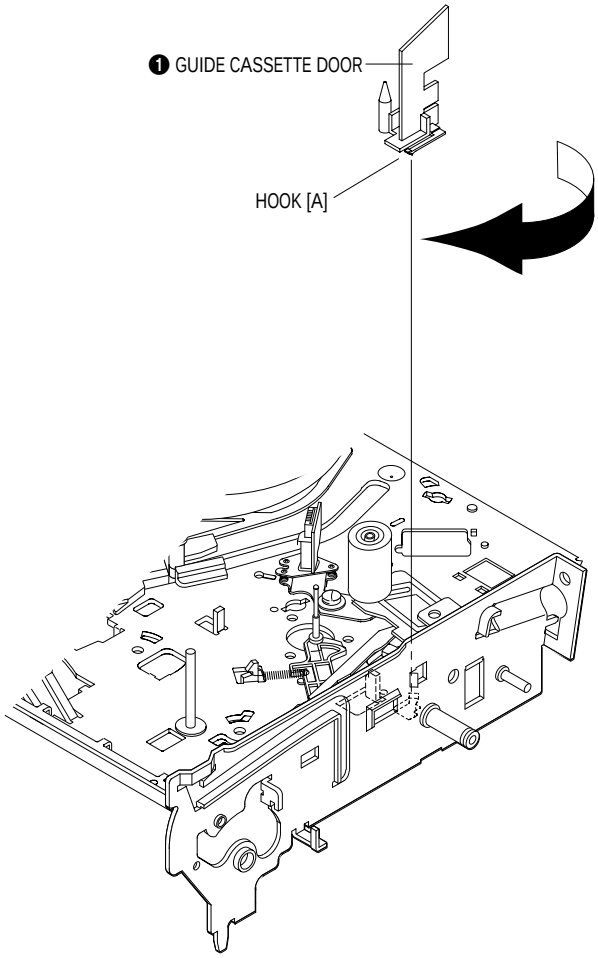

Fig. 4-28 Guide Cassette Door Removal

1-2-19 Lever Unit Pinch Ass'y, Plate Joint, Spring Pinch Drive Removal

1) Lift the Unit Pinch Ass'y ❶.
2) Remove the Plate Joint ❷ from Lever Pinch Drive.
3) Remove the Spring Pinch Drive ❸.

Note :
1) Take extreme care not to touch the grease on the Roller Pinch.
2) When reinstalling, be sure to apply grease on the post pinch roller.

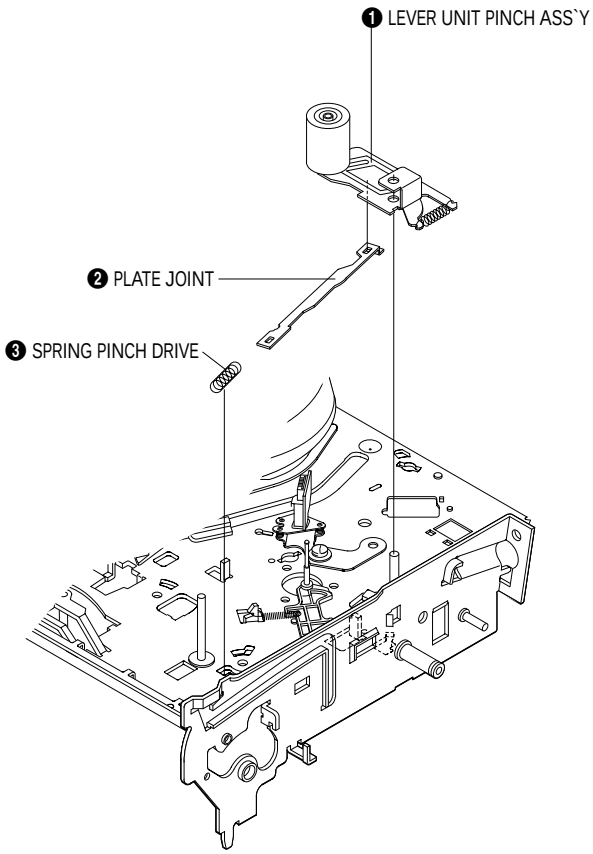

Fig. 4-29 Lever Unit Pinch Ass'y, Plate Joint, Spring Pinch Drive Removal

1-2-20 Lever #9 Guide Ass'y Removal

1) Remove the Spring #9 Guide ❶.
2) Lift the Spring #9 Guide Ass'y ❷ in the direction of arrow "A".

Note :
1) Take extreme care not to get grease on the tape Guide Post.
2) After reinstalling, check the bottom side of the Post #9 Guide to the top side of Main Base.

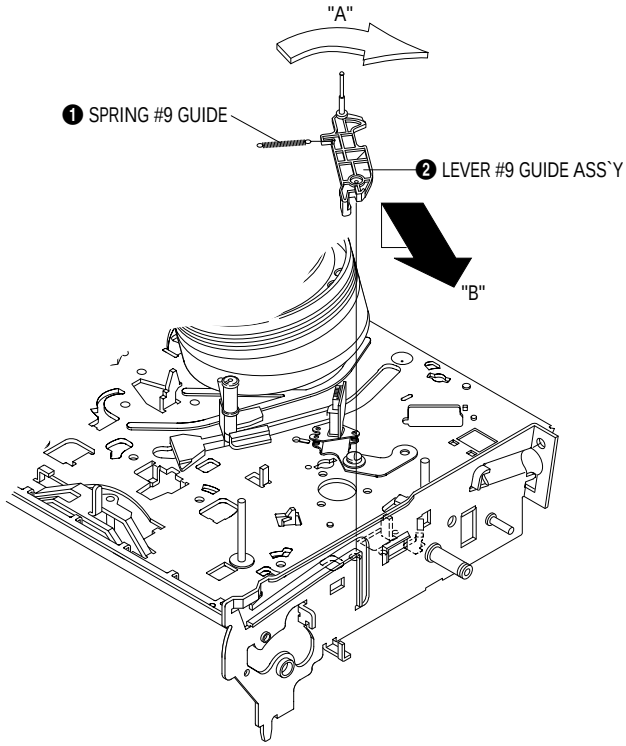

Fig. 4-30 Lever #9 Guide Ass'y Removal

1-2-21 FE Head Removal

1) Remove the screw ❶.
2) Lift the FE Head ❷.

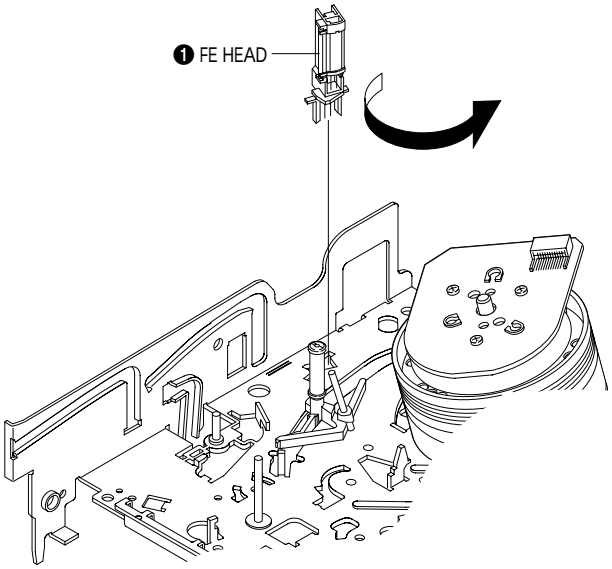

Fig. 4-31 FE Head Removal

1-2-22 ACE Head Removal

1) Pull out the FPC from connector of ACE Head Ass'y ❷.
2) Remove the screw ❶.
3) Lift the ACE Head Ass'y ❷.

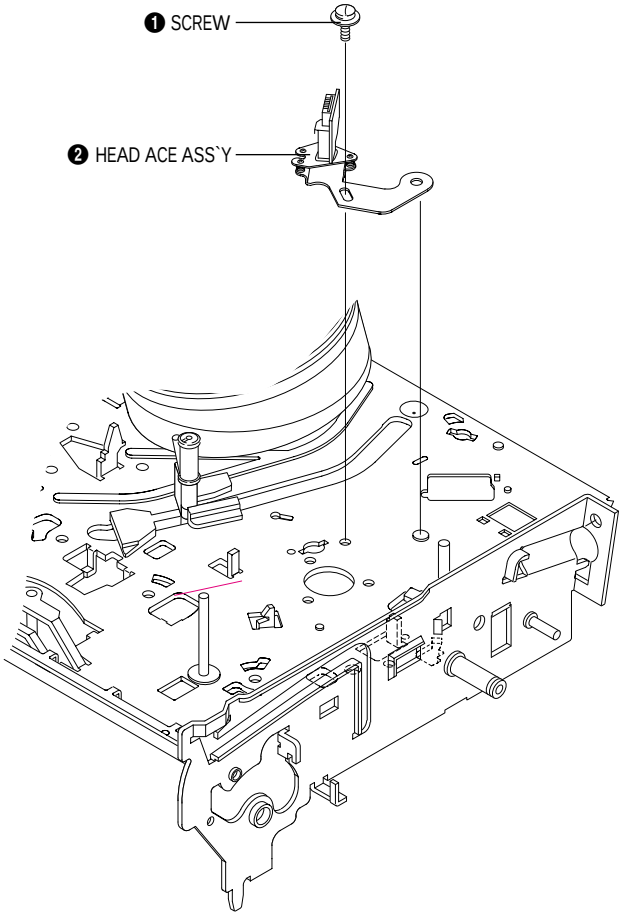

Fig. 4-32 ACE Head Removal

1-2-23 Slider S, T Ass'y Removal

1) Move the Slider S, T Ass'y ❶, ❷ to slot, and then lift it to remove. (Refer to arrow)

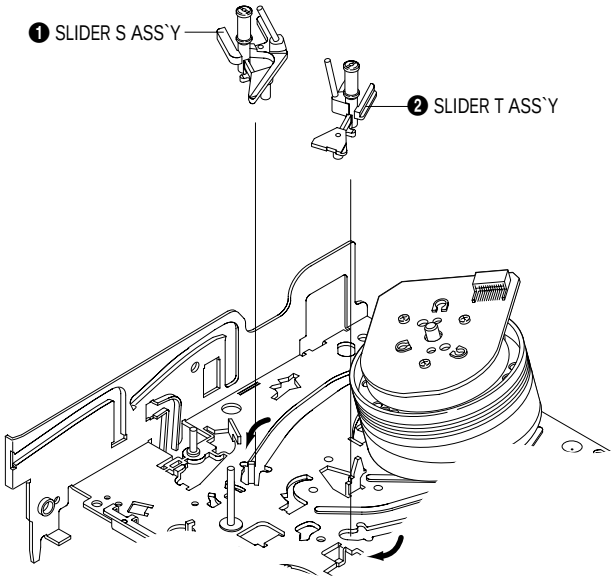

Fig. 4-33 Slider S, T Ass'y Removal

1-2-24 Plate Ground Deck, Cylinder Ass'y Removal

1) Remove the 3 Screws ❶.
2) Lift the Plate Ground Deck ❷.
3) Lift the Cylinder Ass'y ❸.

Assembly :
1) Match the 3 holes in the bottom of Cylinder ass'y ❸ to the 3 holes of Main Base as attending not to drop or knock the Cylinder ass'y ❸.
2) Tighten the 1 Screw ❶.
3) Match the Plate Ground Deck ❷ to the Hole of Base Main.
4) Tighten the other 2 Screws ❶.

Note :
1) Take care not to touch the Cylinder Ass'y ❸ and the tape guide post at reinstalling.
2) When reinstalling, Don't push down too much on Screw Driver.

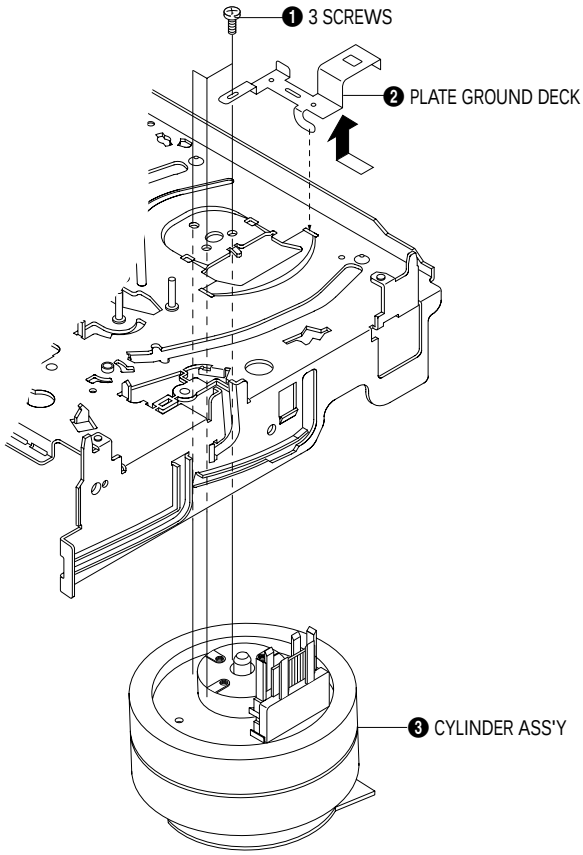

Fig. 4-34 Plate Ground Deck, Cylinder Ass'y Removal

1-2-25 Belt Pulley Removal

1) Remove the Belt Pulley ❶.

Note : Take extreme care not to get grease on Belt Pulley ❶ at assembling or reassembling.

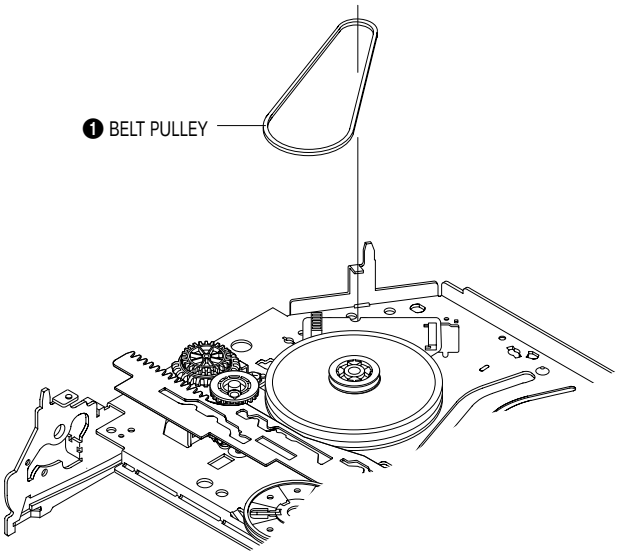

Fig. 4-35 Belt Pulley Removal

1-2-26 Damper Capstan, Motor Capstan Ass'y Removal

1) Remove the Damper Capstan ❶ in the direction of arrow.
2) Remove the 3 Screws ❷.
3) Remove the Motor Capstan Ass'y ❸.

Assembly :
1) Match the 3 holes of Motor Capstan Ass'y ❸ to the 3 holes of Main Base. Be careful not to drop or knock the Motor Capstan Ass'y ❸.
2) Tighten the 3 Screws ❷ in the direction of arrow as shown detail drawing.
3) Assemble the Damper Capstan ❶.

Note : After tightening screws, check if there is gap between the head of screws and the top side of Main Base. There should have no gap between the head of screws and the top side of Main Base.
After reinstalling, adjusting the tape transport system again.

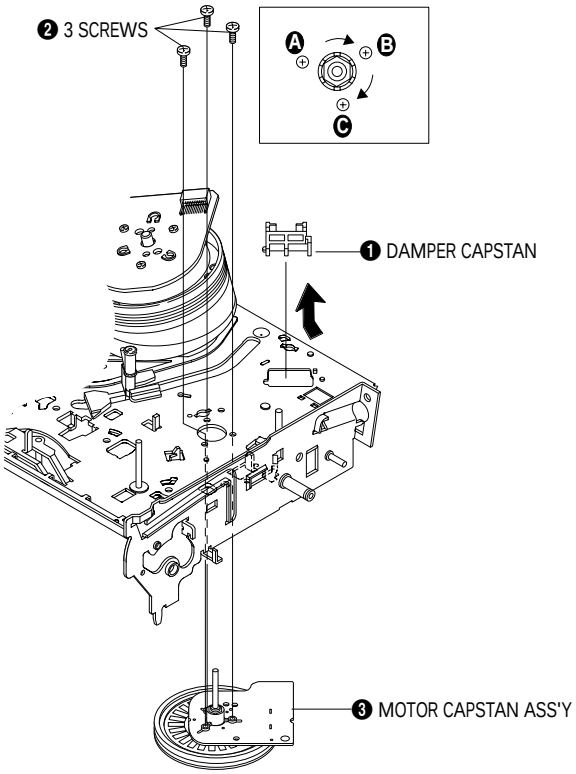

Fig. 4-36 Damper Capstan,Motor Capstan Ass'y Removal

1-2-27 Post #8 Guide Ass'y Removal

1) Rotate the Post #8 Guide Ass'y ❶ in the direction of arrow to lift up.

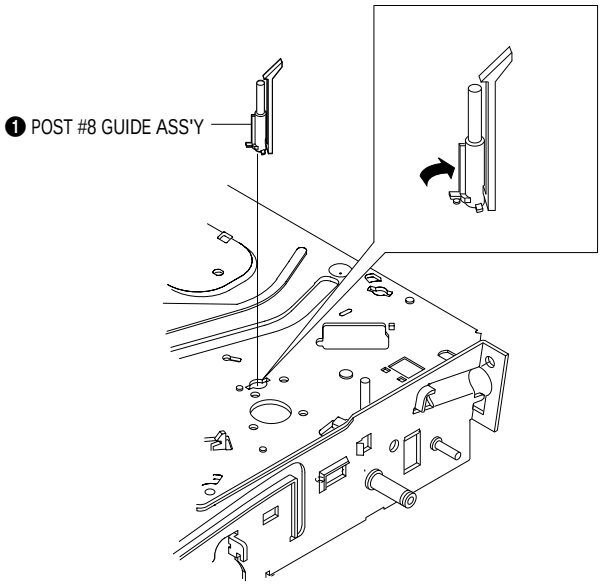

Fig. 4-37 Post #8 Guide Ass'y Removal

1-2-28 Level Head Cleaner Ass'y Removal (Optional)

1) Release the Hook ❶.
2) Lift the Lever Head Cleaner Ass'y ❷.

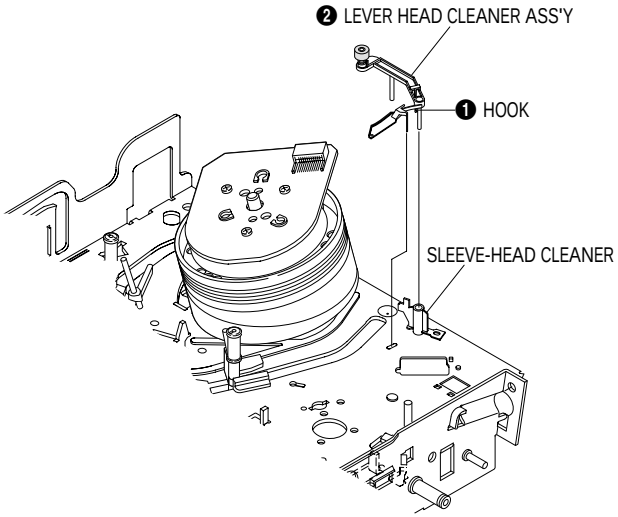

Fig. 4-38 Post #8 Guide Ass'y Removal

1-2-29 How to Eject the Cassette Tape (If the unit does not operate on condition that is inserted into housing ass'y)

1) Turn the Gear worm ❶ clockwise with screw driver.(Refer to arrow)
   (Other method : Remove the Screw of Motor Load Ass'y, Separate the Motor Load Ass'y)

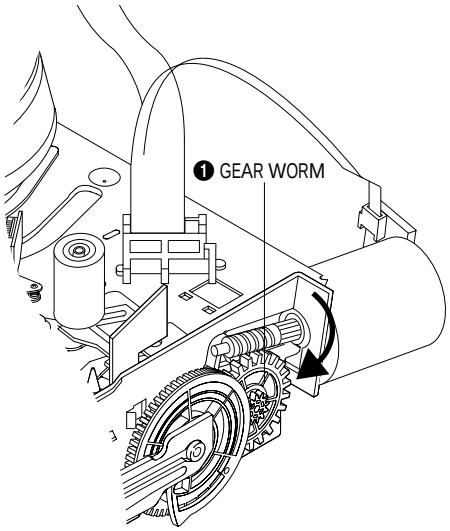

Fig. 4-39

2) When Slider S,T are approched in the position of unloading, rotate holder Clutch counterclockwise after inserting screw driver in the hole of frame's bottom in order to wind the unwinded tape. (Refer to Fig.4-40)
   (If you rotate Gear Worm ❶ continuously when tape is in state of unwinding, you may cause a tape contamination by grease and tape damage. Be sure to wind the unwinded tape in the state of set horizently.)
3) Rotate Gear Worm ❶ clockwise using screw driver again up to the state of eject mode and then pick out the tape.(Refer to Fig.4-39)

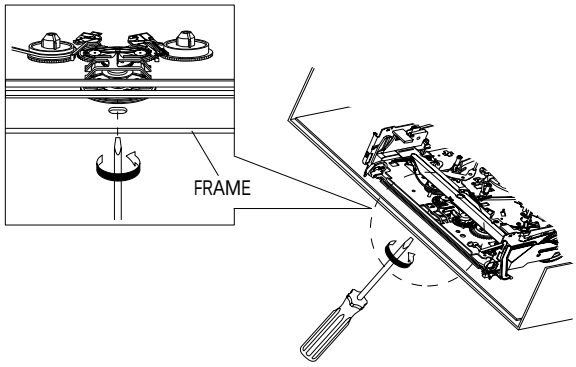

Fig. 4-40

1-3 The table of clearing, Lubrication and replacement time about principal parts

1) The replacement time of parts is not life of parts.
2) The table 1-1 is that the VCR Set is in normal condition (normal temperature, normal humidity).
   The checking period may be changed owing to the condition of use, runtime and environmental conditions.
3) Life of the Cylinder Ass'y is depend on the condition of use.
4) See exploded view for location of each parts.

<Table 1-1>

*	Parts Name	Checking Period										Remark
		500	1000	1500	2000	2500	3000	3500	4000	4500	5000	
TAPE PATH SYSTEM	POST TENSION	Δ	Δ	Δ	Δ	Δ	Δ	Δ	Δ	Δ	Δ	- To clean the parts, use patch and alcohol (solvent).
	SLANT POST S, T	Δ	Δ	Δ	Δ	Δ	Δ	Δ	Δ	Δ	Δ	
	#8 GUIDE SHAFT	Δ	Δ	Δ	Δ	Δ	Δ	Δ	Δ	Δ	Δ	- After cleaning, use the video tape after alcohol is gone away completely.
	CAPSTAN SHAFT	Δ	Δ	Δ	Δ	Δ	Δ	Δ	Δ	Δ	Δ	
	#9 GUIDE POST	Δ	Δ	Δ	Δ	Δ	Δ	Δ	Δ	Δ	Δ	
	#3 GUIDE POST	Δ	Δ	Δ	Δ	Δ	Δ	Δ	Δ	Δ	Δ	
	GUIDE ROLLER S, T	Δ	Δ	Δ	O	O	O	O	O	O	O	- We recommend to use oil [EP-50] or solvent.
	CYLINDER ASS'Y	Δ	O	O	O	O	O	O	O	O	O	
	FE HEAD	Δ	Δ	Δ	O	O	O	O	O	O	O	- One or two drops of oil should be applied after cleaning with alcohol.
	ACE HEAD	Δ	O	O	O	O	O	O	O	O	O	
	PINCH ROLLER	Δ	O	O	O	O	O	O	O	O	O	
	POST REEL S, T											- Periodic time of applying oil (Apply oil after cleaning) - The excessive applying oil may be the cause of malfunction.
	SLEEVE TENSION											
	POST CENTER											
	LEVER IDLE BOSS (2Point)											
DRIVING SYSTEM	CAPSTAN MOTOR PULLEY	Δ	Δ	Δ	Δ	Δ	O	O	O	O	O	
	BELT PULLEY				O	O	O	O	O	O	O	
	HOLDER CLUTCH ASS'Y	Δ	O	O	O	O	O	O	O	O	O	
	GEAR CENTER ASS'Y		O	O	O	O	O	O	O	O	O	
	GEAR IDLE (2Point)		O	O	O	O	O	O	O	O	O	
	LOADING MOTOR		O	O	O	O	O	O	O	O	O	
BRAKE SYSTEM	BAND BRAKE ASS'Y		O	O	O	O	O	O	O	O	O	
	BRAKE T ASS'Y		O	O	O	O	O	O	O	O	O	

Δ : Cleaning O : Check and replacement in necessary : Add Oil

5. Alignment and Adjustment

5-1 Reference

1) X-Point (Tracking center) adjustment, “Head switching adjustment” and “NVRAM option setting” can be adjusted with remote control.
2) When replacing the micom (IC601) be sure to adjust the “Head switching adjustment” and “NVRAM option setting”.
3) When replacing the cylinder ass’y, be sure to adjust the “X-Point” and “Head switching adjustment”.
4) Remote control used for same chassis as a accessory is available for all adjustments.
5) How to adjustment.
   - Monmently short-circuit the test point on Main PCB with pincets to set the adjustment mode.
   - If the corresponding adjustment button is pressed, the adjustment is preformed automatically.
   - If the adjustment is completed, be sure to turn the power off.

5-1-1 Location of adjustment button of remote control

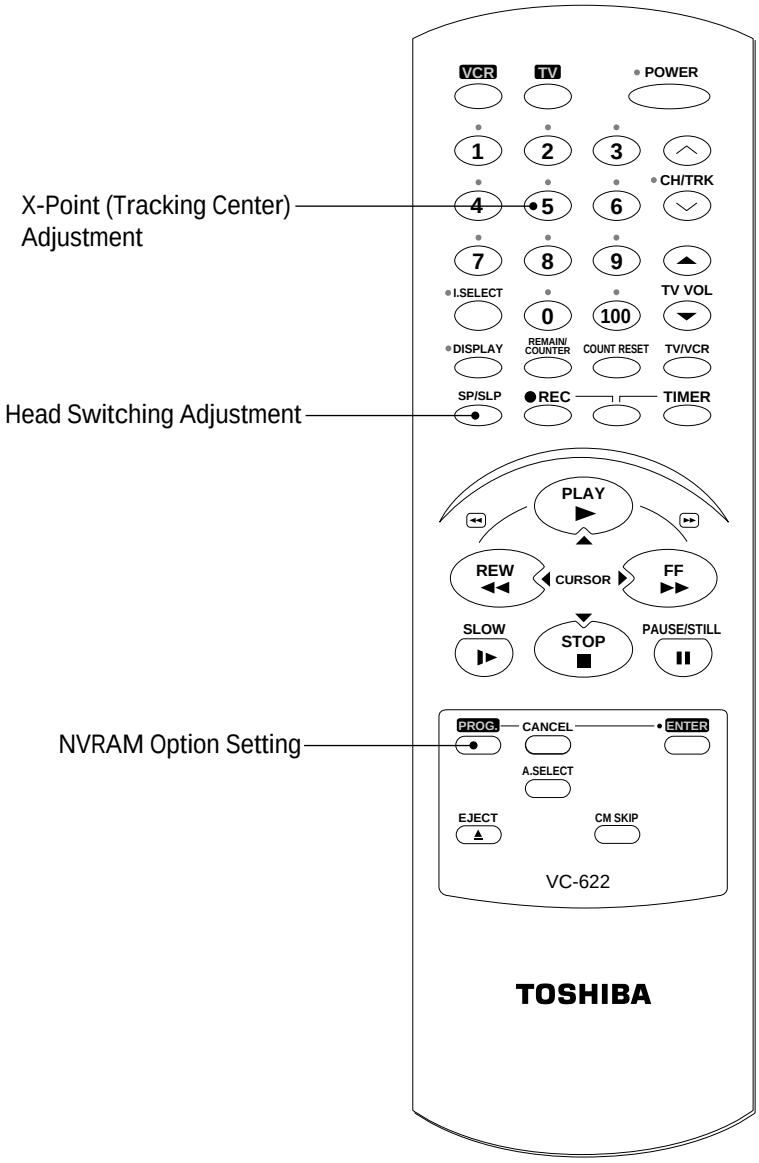

Fig. 5-1

5-1-2 Test point location for adjustment mode setting

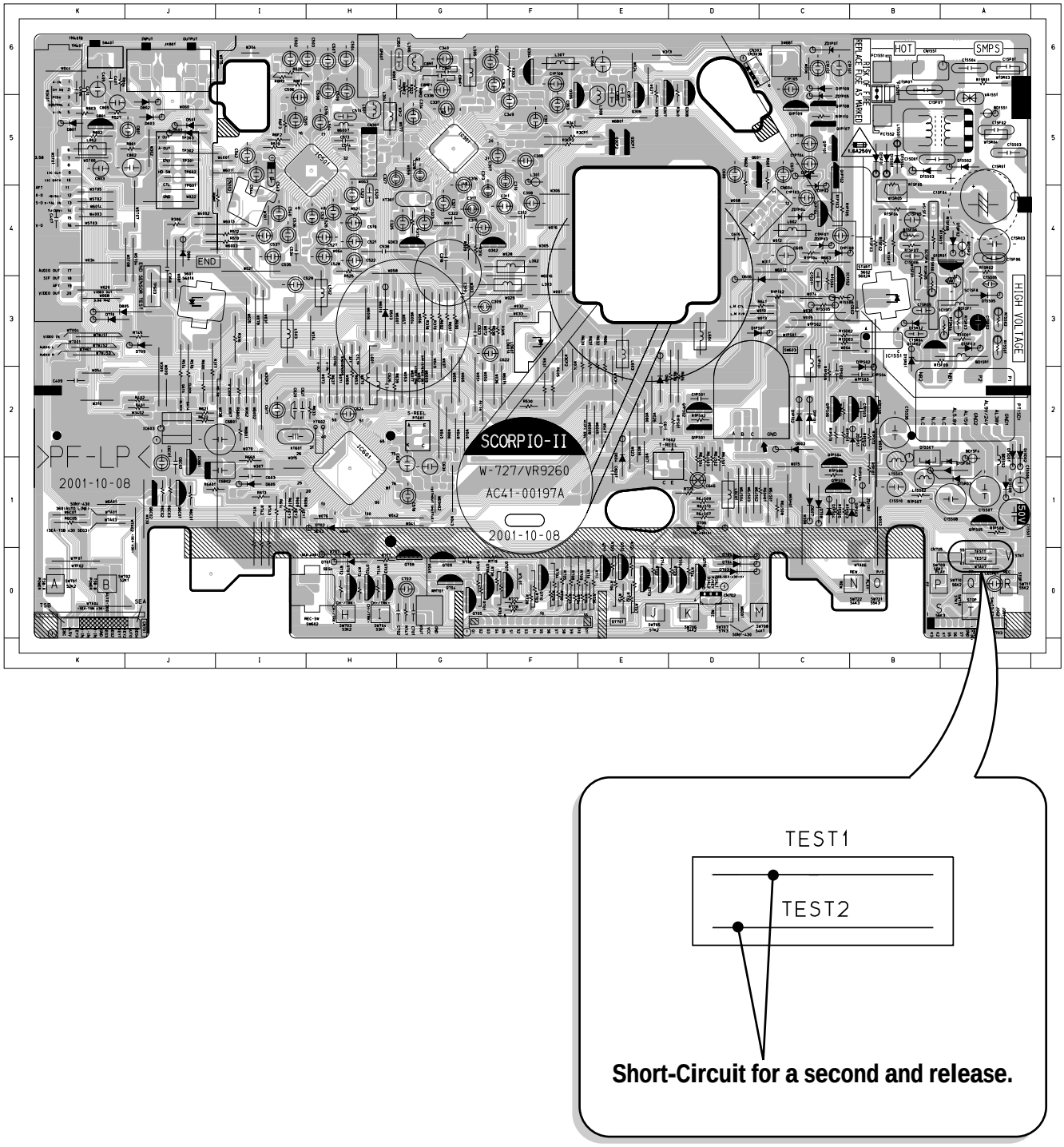

Fig. 5-2 Main PCB (Top View)

5-2 Mechanical Adjustment

5-2-1 Tape Transport System and Adjustment Locations

The tape transport system has been adjusted precisely in the factory. Alignment is not necessary except for the following :
1) Noise observed on the screen.
2) Tape damage.
3) Parts replacement in the tape transport system.

Lower flange height of tape guide is used as the reference for the transport adjustment.
To maintain the height of the tape guide and prevent damage, do not apply excessive force onto the main base.

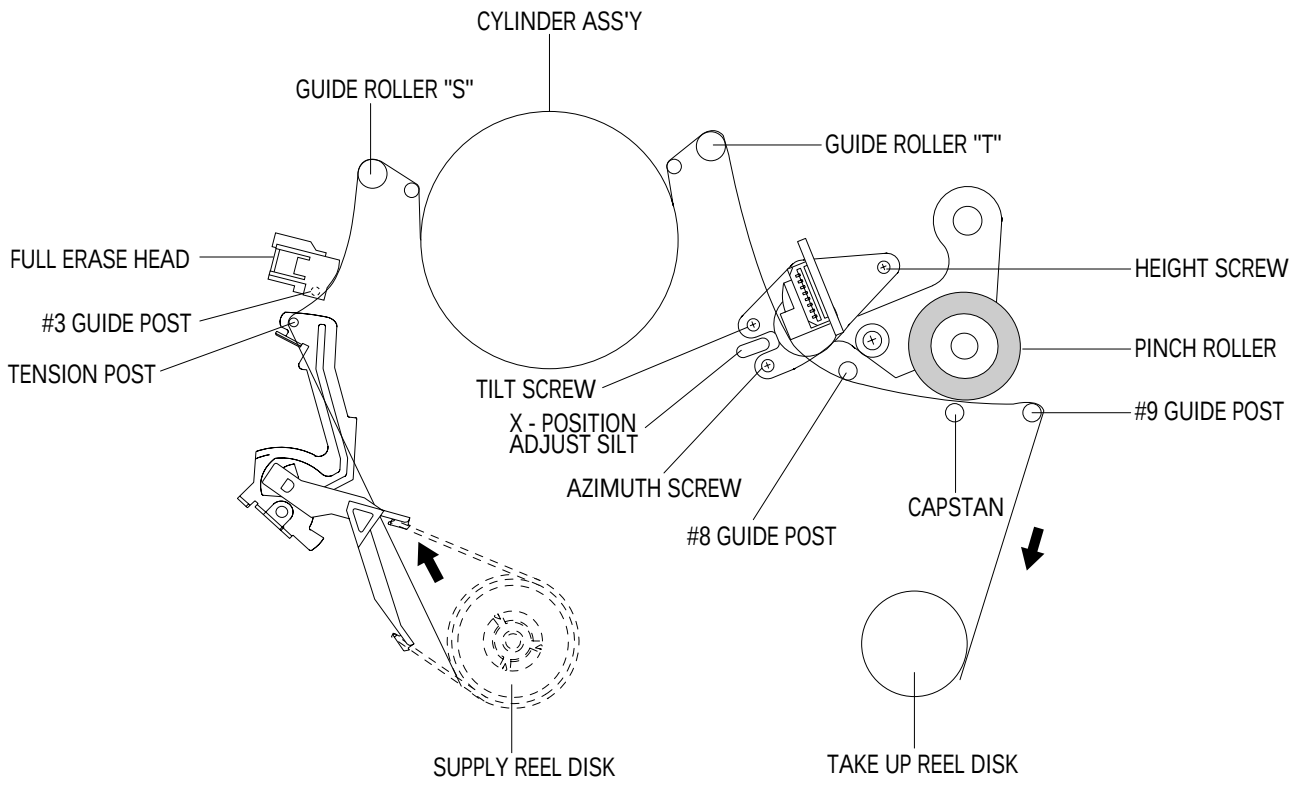

Fig. 5-3 Location of Tape Transport Adjustment

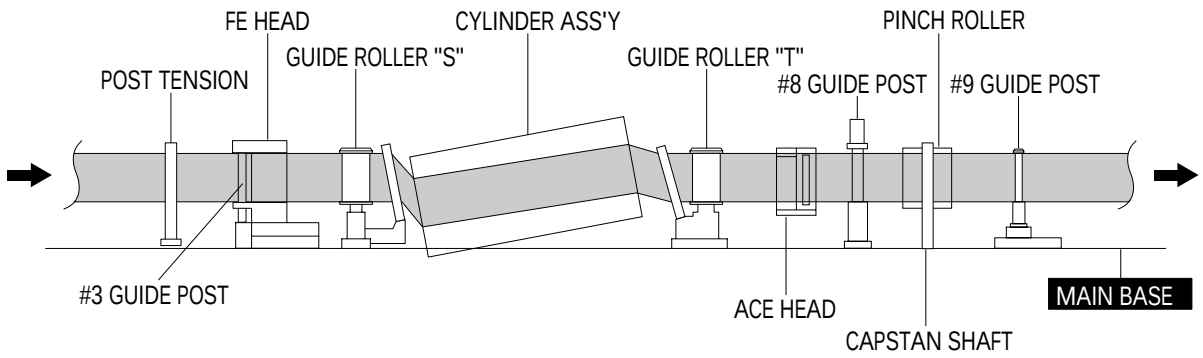

Fig. 5-4 Tape Travel Diagram

5-2-2 Tape Transport System Adjustment

When parts are replaced, perform the required adjustments by referring to precedures for the tape transport system. If there are any changes to the tape path, first run a T-120 tape and make sure excessive tape wrinkle does not occur at the tape guides.

1) If tape wrinkle is observed at the guide roller S, T, turn the guide roller S, T until wrinkle disappears.
2) If the tape wrinkle is still observed at the tape guide, perform the tilt adjustment of the ACE head.

(1) ACE Head Assembly Adjustment

Test point :	TP601 (Control Pulse)
	TP602 (H'D S/W -Trigger)
	TP301 (Envelope)
	TP302 (Audio output)
	TP303 (Video output)
Test tape :	ST-N1
	BLANK TAPE : T-160

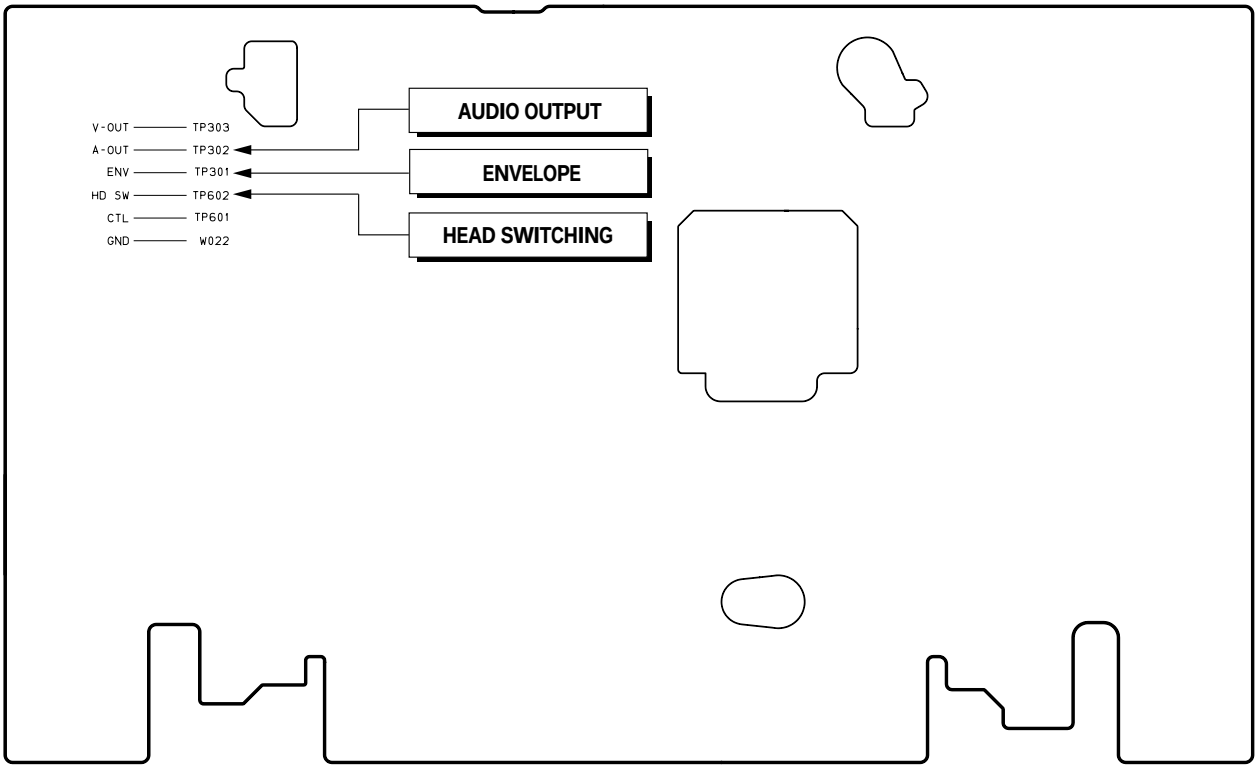

Fig. 5-5 Location of Test point (Main PCB-Top View)

a. ACE HEAD HEIGHT ADJUSTMENT

1) Run the alignment tape (Color bar) in the playback mode.
2) Observe surface of the audio head using a dental mirror.
3) Turn screw (C) clockwise or counterclockwise until the gap of lower tape edge and the lower edge of the control head is about 0.25mm.
(Refer to Fig. 5-6 and 5-7)

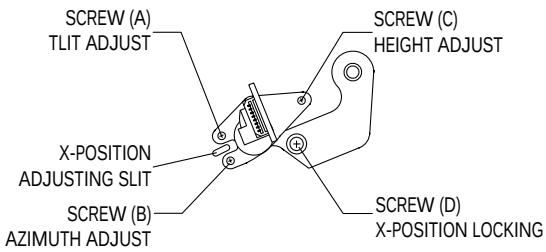

Fig. 5-6 Location of ACE Head Adjustment Screw

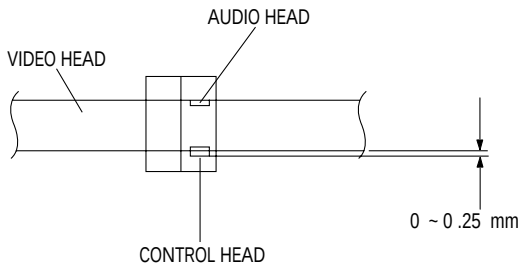

Fig. 5-7 ACE Head Height Adjustment

b. ACE HEAD TILT ADJUSTMENT

1) Playback a blank tape and observe the position of the tape at the lower flange of tape guide.
2) Confirm that there is no curl or wrinkle at the lower flange of tape guide as shown in Fig. 5-8 (B).
3) If a curl or wrinkle of the tape occurrs, slightly turn the screw (A) tilt adjust on the ACE head ass'y.
4) Reconfirm the ACE head height.

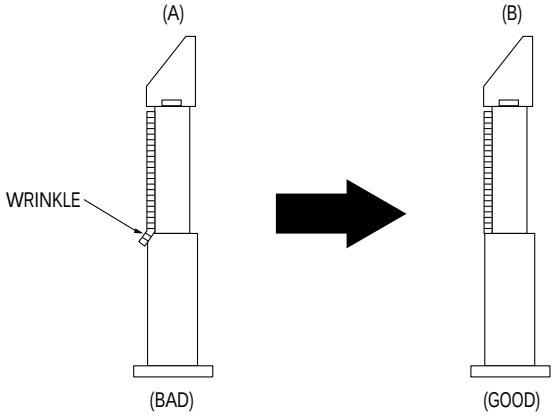

Fig. 5-8 Tape Guide Check

c. AUDIO AZIMUTH ADJUSTMENT

1) Load alignment tape (Mono scope) and playback the 7KHz signal.
2) Connect channel-1 scope probe to audio output test point (TP302).
3) Adjust screw (B) to achieve maximum audio level. (See Fig. 5-6)

d. ACE HEAD POSITION (X-POINT) ADJUSTMENT

1) Playback the alignment tape (Color bar).
2) Monmently short-circuit the test point on Main PCB with pincers to set the adjustment mode. (See Fig. 5-2)

3) Press the "5" button of remote control then adjustment is operated automatically. (See Fig. 5-1)
4) Connect the CH-1 probe to TP301 (Envelope) the CH-2 probe to TP602 (H'D switching pulse) and then trigger to CH-1.
5) Insert the (-) driver into the X-Point adjustment hole and adjust it so that envelope wavwform is maximum.
6) Turn the Power off.

(2) Linearity adjustment (Guide roller S, T adjustment)

1) Playback the Mono Scope alignment tape (SP mode).
2) Observe the video envelope signal on an oscilloscope (triggered by the video switching pulse).
3) Make sure the video envelope waveform (at its minimum) meets the specification shown in Fig. 5-9.
   If it does not, adjust as follows :

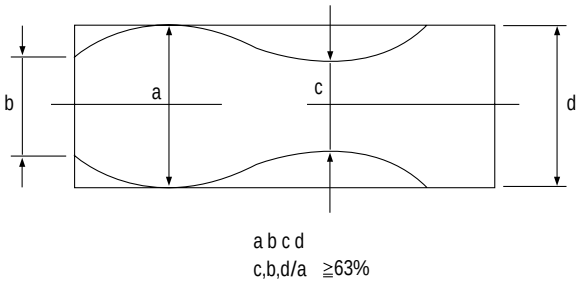

Fig. 5-9 Envelope Waveform Adjustment

Note :
a=Maximum output of the video RF envelope.
b=Minimum output of the video RF envelope at the entrance side.
c=Minimum output of the video RF envelope at the center point.
d=Maximum output of the video RF envelope at the exit side.

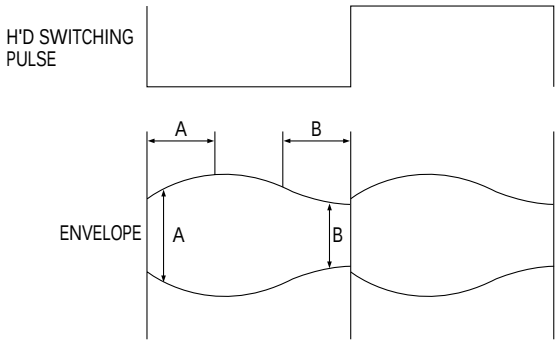

Fig. 5-10 Adjustment Points

4) If the section A in Fig. 5-10 does not meet the specification, adjust the guide roller S up or down.
5) If the section B in Fig. 5-10 does not meet the specification, adjust the guide roller T up or down.

6) Play back the Mono Scope alignment tape (SP mode).
7) Connect an oscilloscope CH-1 to the Envelope and CH-2 to the H'D SW Pulse for triggering.
8) Turn the guide roller heads with a flat head ( ) driver to obtain a flat video RF envelope as shown in Fig. 5-11.

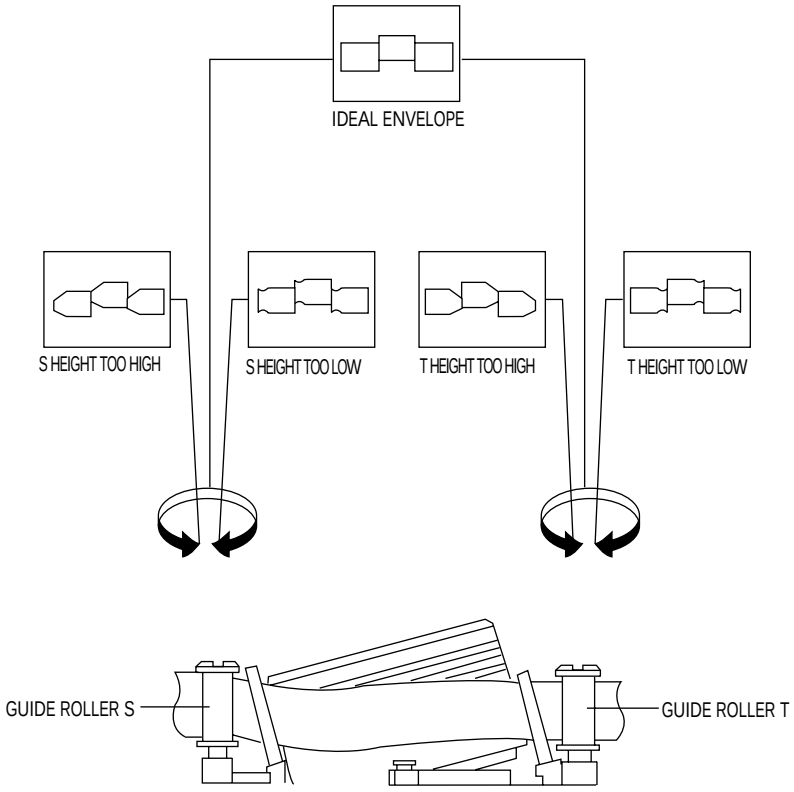

Fig. 5-11 Guide Roller S, T Height Adjustment

(3) Check Transitional Operation from RPS to Play

Check transition from RPS mode to play mode :
Using a pre-recorded SP tape, make sure the entry side of envelope comes to an appropriate steady state within 3 seconds (as shown in Fig. 5-12).
If the envelope waveform does not reach specified peak-to peak amplitude within 3 seconds, adjust as follows :

1) Make sure there is no gap between the supply roller lower flange and the tape.
   If there is a gap, adjust the supply guide roller again.
2) Change operation mode from the RPS to the play mode (again) and make sure the entry side of envelope rises within 3 second.

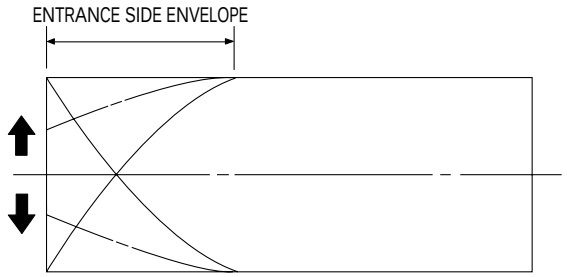

Fig. 5-12 Video Envelope Rising when Operation mode Changes from RPS to Play Mode

(4) Envelope Check

1) Make recordings on T-120 (E-120) and T-160 (E-180) tape.
   Make sure the playback output envelope meets the specification as shown in Fig. 5-13.
2) Play back a self recorded tape (recording made on the unit using with T-120 (E-120).
   The video envelope should meet the specification as shown in Fig. 5-13.
   In SP mode, (A) should equal (B).
   If the head gap is wide, upper cylinder should be checked.

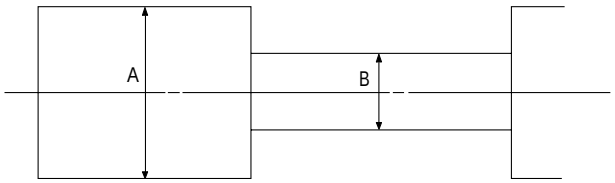

Fig. 5-13 Envelope Output and Output Level

(5) Tape Wrinkle Check

1) Run the T-160 (E-180) tape in the playback, FPS, RPS and Pause modes and observe tape wrinkle at each guide.
2) If excessive tape wrinkle is observed, perform the following adjustments in Playback mode :

◆ Tape wrinkle at the guide roller S, T section :
  Linearity adjustment.
◆ Tape wrinkle at tape guide flange :
  ACE head assembly coarse adjustment.

5-2-3 Reel Torue

1) The rotation of the capstan motor causes the Holder Clutch Ass'y to rotate through the Belt Pulley.
2) The spring wrap PLAY/REV of holder clutch ass'y drives the disk reel S, T through gear idle by rotation of gear center ass'y.
3) Brake is operated by slider cam at FF/REW mode.
4) Transportation of accurate driving force is done by gears. (Gear Center Ass'y)

Note : If the spec. does not meet the followings specifications, replace the holder clutch ass'y and then recheck.

<Table 5-1>

MODE	TORQUE g/cm	GAUGE
PB	42 ± 11	Cassette Torquemeter
RPS	145 ± 30	Cassette Torquemeter

5-3 Head Switching Point Adjustment

1) Playback the alignment tape.
2) Monmently short-circuit the test point on Main PCB with pincers to set the adjustment mode. (See Fig. 5-2)
3) Press the “SP / SLP” button of remote control then adjustment is operated automatically. (See Fig. 5-1)
4) Turn the Power off.

5-4 NVRAM Option Setting

1) NVRAM Option is adjusted at production line basically.
2) In case Micom (IC601) and NVRAM (IC603 ; EEPROM) is replaced, be sure to set the corresponding ooption number of the repaired model. (If the option is not set, the unit is not operated.)

1) Monmently short-circuit the test point on Main PCB with pincers to set the adjustment mode. (See Fig. 5-2)
2) Press the “PROG.” button of remote control about 5 seconds then option setting display is appeared. (See Fig. 5-14)
3) Select the option number (See Table 5-2) of corresponding model with “FF” and “REW” button of remote control.
4) If selecting the option number is completed, press the “PLAY” button of remote control. (If “PLAY” button is pressed, the selected number is changes reversed color. ; See Fig. 5-14)
5) Press the “ENTER” button of remote control again to store the option number. (“SAVE” is displayed for a second as shown Fig. 5-15 this setting is completed.)
6) Turn the Power off.

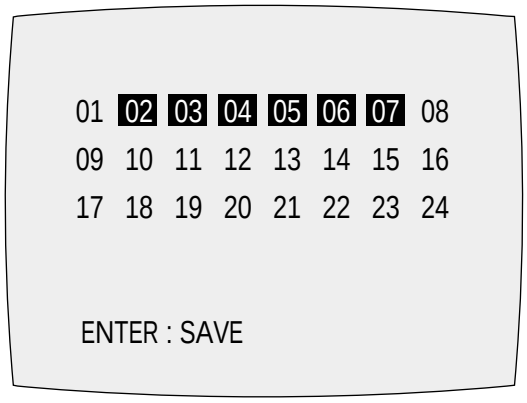

Fig. 5-14

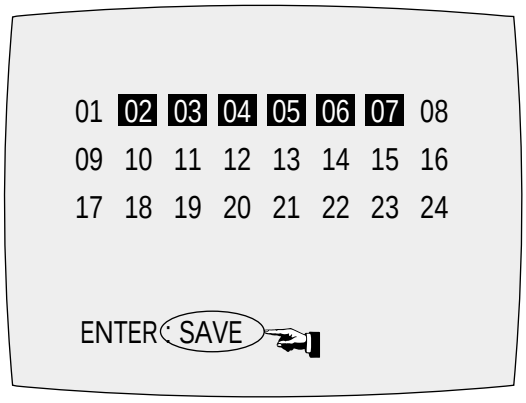

Fig. 5-15

<Table 5-2>

MODEL	OPTION NUMBER
W-622	2, 3, 4, 5, 6, 7, 10, 13, 15, 21, 22, 26, 28

6. Exploded View

6-1 Packing Assembly - 6-2

6-2 Instrument Assembly - 6-3

6-3 Mechanical Parts (Top Side) - 6-4

6-4 Mechanical Parts (Bottom Side) - 6-5

6-1 Packing Assembly

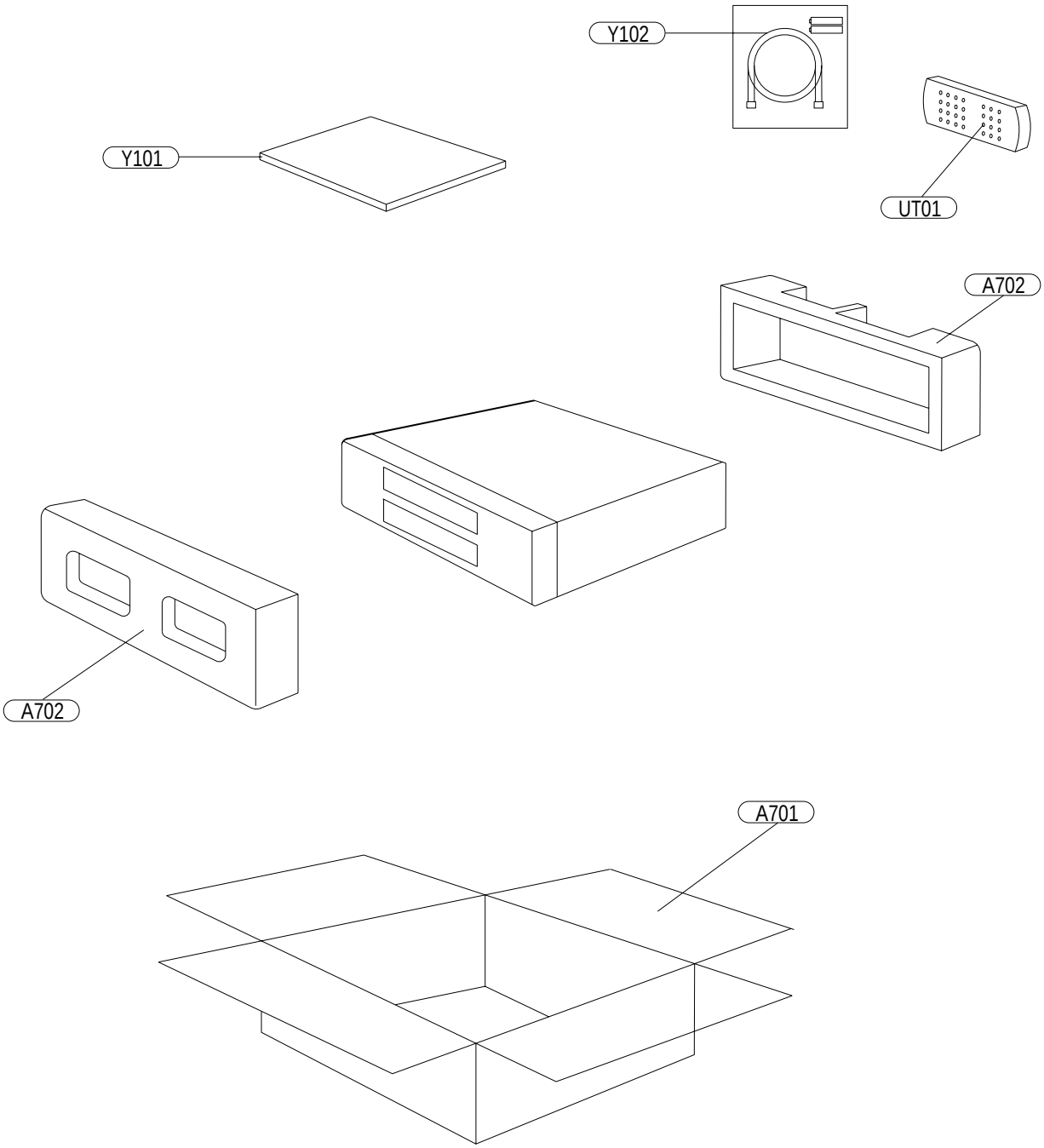

6-2 Instrument Assembly

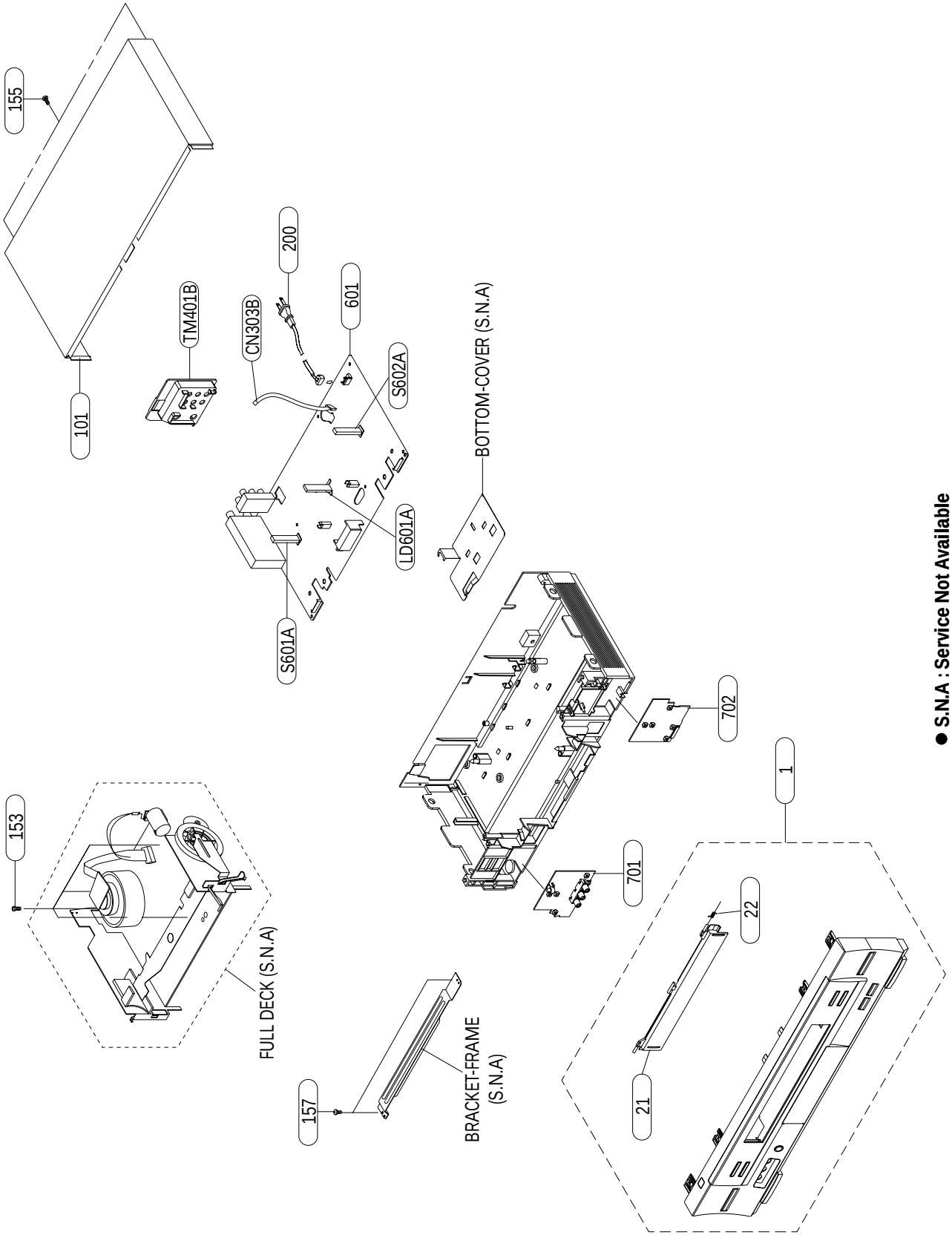

6-3 Mechanical Parts (Top Side)

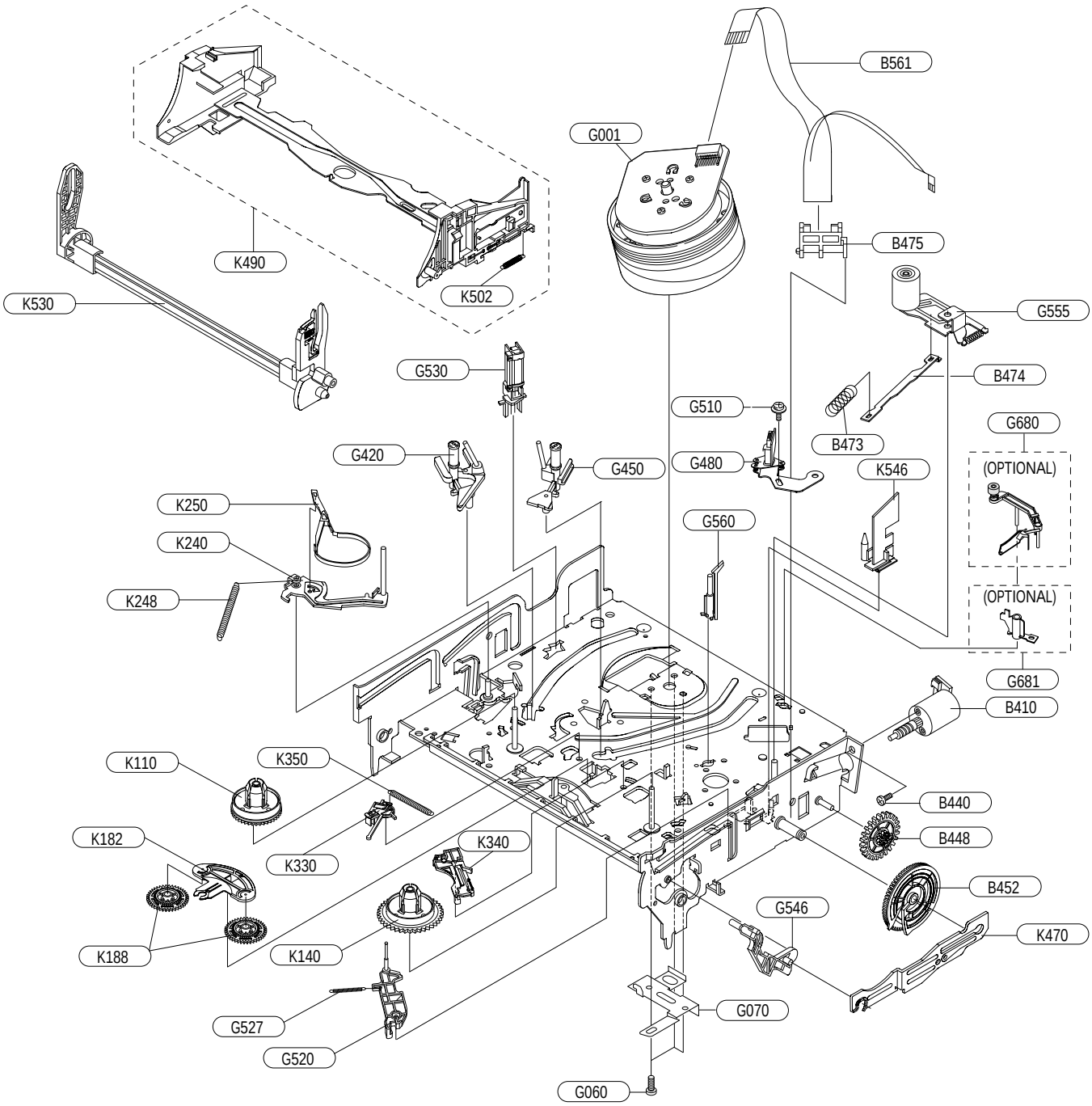

6-4 Mechanical Parts (Bottom Side)

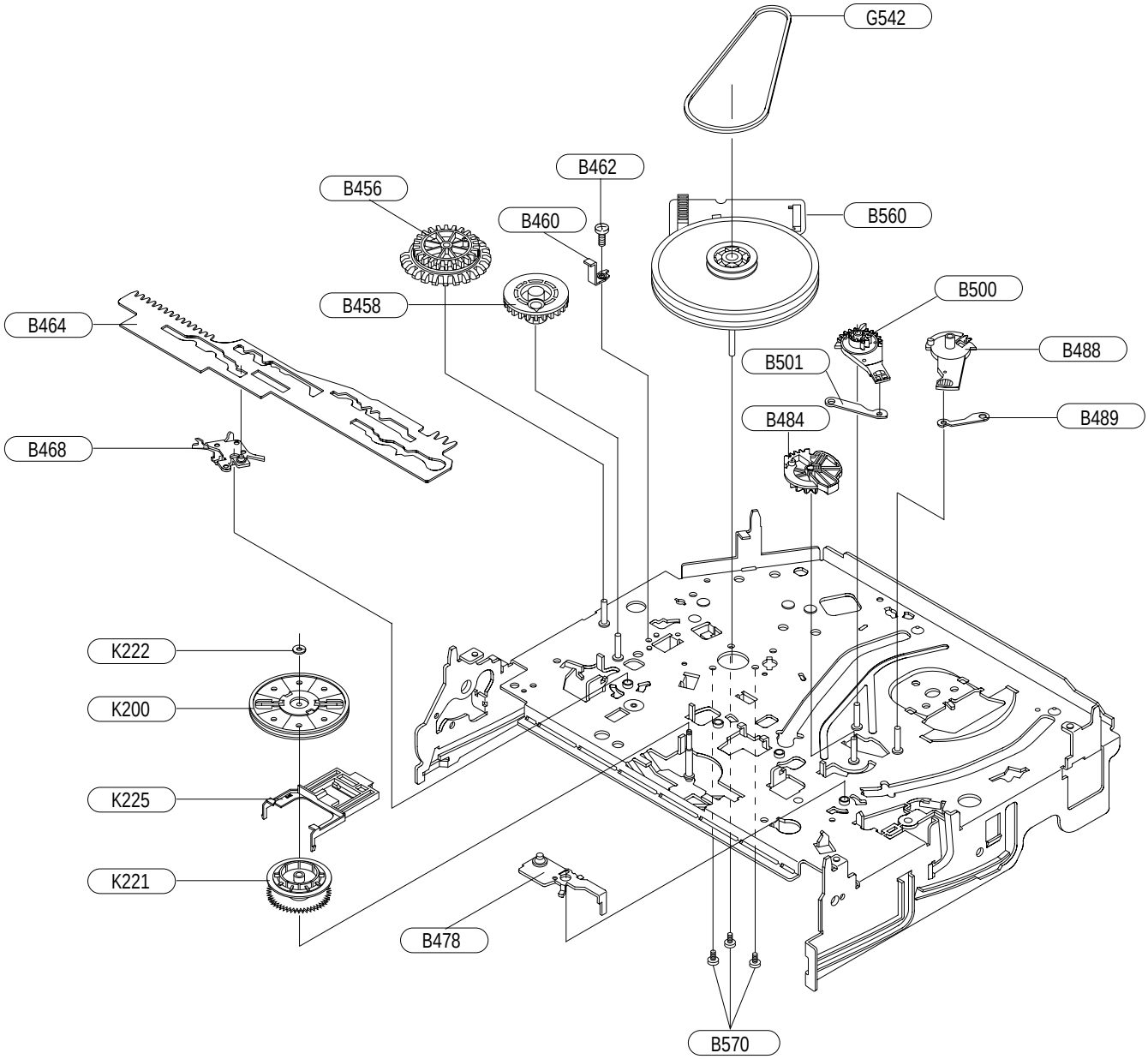

7. Replacement Parts List

Loc.No.	TSB Parts No.	Reference No.	Description ; Specification	Remark
- PACKING PARTS -				
A701	BY731060	AC69-00266A	PACKING CASE;W-622/TSB,SW2,-,-,W505,L326	
A702	BY730463	AC69-00040A	CUSHION-F/B;M-686,EPS,-,-,-,-,-	
UT01	BY634674	AC59-00019P	REMOCON-ASSY;VC-622,TSB,HI-FI,FULL SIZE,	
Y101	BY634686	AC68-01702A	MANUAL USERS;W-622,TSB,-,-,MOJO100,-,W26	
Y102	BY634274	AC39-42001J	CABLE-RF ASSY;#1365,-,1.2MT,75-75OHM,-,-	
- INSTRUMENT PARTS -				
1	BY630253	AC97-01747A	ASSY-PANEL FRONT;HIPS94V2,W-622/TSB,T/BL	
21	BY634678	AC64-00451Y	DOOR-CASSETTE;V-622/TSB,ABS94HB,T2.5,-,-	
22	BY730093	AC61-62032A	SPRING ETC-MASK;SV-C130,SUS,4.4,-,-,-,-	
101	BY730457	AC64-00124A	CABINET-TOP;M-686/TSB,PCM(SECC),T0.5,-,-	
102	BY731019	AC63-00026A	COVER-BOTTOM;SV-G877,SPTE,T0.3,-,-,-,-	
153	70790218	AC60-12126A	SCREW-BH;-,-,FE,FZY,BH,-,-,4*12,-,-	
155	70790082	AC60-12134A	SCREW-TAP BH;-,FZB,2-4X16,FE,BH,-,-,2-4X	
157	70790002	AC60-10063A	SCREW-TAPTITE;-,-,L12,ZPC3,+,-,M3,-,SWRC	
200	BY731052	AC39-00060A	POWER CORD;BUSH(V0),SPT-2,AWG#18,EP2(POL	
CN303B	BY634415	3809-001206	CABLE-FLAT;30V,-20to+80C,140mm,6P,1.25mm	
LD601A	BY730082	AC61-21009A	HOLDER-LED;X-9,POM(M90-44),-,-,-,BLK,-	
S601A	BY731054	AC61-00229A	HOLDER-SENSOR;SCORPIO2,POM,-,-,-,BLACK,-	
S602A	BY731054	AC61-00229A	HOLDER-SENSOR;SCORPIO2,POM,-,-,-,BLACK,-	
TM401B	BY730499	AC61-00058A	CONNECTOR BOARD-ASSY;TCE,HIPS,T2,-,61,-,	
- MECHANICAL PARTS -				
B410	BY631184	AC31-00018A	MOTOR-LOADING ASSY;-,SCORPIO2(TS-10A),-,	
B440	BY730072	AC60-10515A	SCREW-MACHINE;-,-,M3,L3,PH,+,-,-,ZPC,-	
B448	BY730743	AC66-00008A	GEAR-WORM WHEEL;TS-10,POM,0.8,40,-,NAT,3	
B452	BY730745	AC66-00011A	GEAR-FL CAM;TS-10,POM,0.8,59,-,BLK,48.48	
B456	BY730744	AC66-00009A	GEAR-JOINT 1;TS-10,POM,1.5,17.5(22),-,NA	
B458	BY730746	AC66-00012A	GEAR-JOINT 2;TS-10,POM,1.0,23,-,BLK,24.6	
B460	BY730851	AC61-00090A	BRACKET-GEAR;TS-10,SECC E20/20,0.8,-,-,-	
B462	BY730073	AC60-10517A	SCREW-TAP TITE;-,-,M2.6,L5,PH,+,-,-,ZPC,	
B464	BY730749	AC66-00019A	SLIDER-CAM;TS-10,SECC E20/20,1.2,-,-,-,-	
B468	BY730748	AC66-00017A	LEVER-PINCH DRIVE;TS-10,SECC E20/20,1.0	
B473	BY730723	AC61-00105A	SPRING ETC-PINCH DRIVE;TS-10,SUS304-WPB,	
B474	BY730244	AC61-30180A	PLATE-JOINT;X-9,SECC20/20,T0.8,-,-,-,-	
B475	BY731053	AC47-00003A	DAMPER-CAPSTAN;SCORPIO2,POM, NATUAL,-,-,	
B478	BY730747	AC66-00016A	LEVER-TENSION DRIVE;TS-10,SECC E20/20,1	
B484	BY730755	AC66-00030A	GEAR-LOADING DR. ASS'Y;TS-10,POM+SWPB,-,	
B488	BY730753	AC66-00023A	LEVER-S LOADING;TS-10,POM,-,-,-,-,NAT,-	
B489	BY730751	AC66-00021A	LINK-LOADING S;TS-10,SECC E20/20,0.8,-,-	
B500	BY730754	AC66-00024A	LEVER-T LOADING;TS-10,POM,-,-,-,-,NAT,-	
B501	BY730752	AC66-00022A	LINK-LOADING T;TS-10,SECC E20/20,0.8,-,-	
B560	BY631187	AC31-00016A	MOTOR-CAPSTAN;F2QVB05,SCORPIO2(TS-10A),-	
B561	BY634670	3809-001270	CABLE-FLAT;30V,80C,140MM,10P,1.25MM,UL28	
B570	BY730071	AC60-10514A	SCREW-CAPSTAN;-,-,M2.6,L6,PH,+,-,-,-,-	
G001	BY630252	AC97-01741A	ASSY-CYLINDER;6NAJ-ALPS'S HEAD,CTS10A-SC	
G060	BY634416	6006-001092	SCREW-ASS'Y MACH;WS,PH,+,M3.0,L6.0,ZPC(Y	
G070	BY730728	AC61-00161A	PLATE-GROUND DECK;TS-10,SPTE,T0.3,-,-,-,	
G420	BY730124	AC66-80142A	SLIDER-SUPPLY ASSY;-,X-9(TS),-,-,-,X-9	
G450	BY730123	AC66-80141A	SLIDER-TAKE UP ASSY;-,X-9(TS),-,-,-,X-9	
G480	BY630248	AC97-01660A	ASSY-HEAD ACE;-,SCORPIO2(TS-10A),VTR-1*2	
G510	BY730479	6006-001075	SCREW-ASS'Y TAPT;WSP,PH,+,M2.6,L5.0,ZPC(	
G520	BY730757	AC66-00033A	LEVER-#9 GUIDE ASS'Y;TS-10,-,-,-,-,-,-	
G527	BY730088	AC61-60553A	SPRING ETC-GUIDE 9;X-9,SUS304-WPB,0.25,-	
G530	BY730775	AC33-00007A	HEAD-FE;-,-,HVFHPOO43A,-,-	
G542	BY730122	AC66-60051A	BELT-PULLEY;X-9,5CM-70,2 * 2,71.3,-,-,-,	
G546	BY730741	AC66-00005A	LEVER-FL DOOR;TS-10,POM,-,-,-,-,NAT,-	
G555	BY730756	AC66-00032A	LEVER-UNIT PINCH ASS'Y;TS-10,-,-,-,-,-,-	
G680	BY730776	AC66-00046A	LEVER-HEAD CLEANER ASS'Y;TS-10,POM+URETH	
G681	BY730267	AC61-50686A	SLEEVE-HEAD CLEANER;TS(X-9),-,-,-,-,-,-,	
K110	BY730102	AC66-10267A	REEL-DISK S;X-9,POM,-,-,-,-,-,-	
K140	BY730103	AC66-10268A	REEL-DISK T;X-9,POM,-,-,-,-,-,-	
K182	BY730112	AC66-30524A	LEVER-IDLER;-,POM,-,-,-,-,-,-	
K188	BY730760	AC66-00039A	GEAR-IDLE;TS-10,PET K3372,0.5,-,-,NTR,28	
K200	BY730084	AC61-21012A	HOLDER-CLUTCH ASSY;-,-,-,-,-,-,X-9	
K221	BY730111	AC66-20581A	GEAR-CENTER ASSY;-,POM,M=O.5,-,HIGHT T.,	
K222	BY730076	AC60-30306A	WASHER-SLIT;-,-,ID2.1,OD5.0,T0.5,-,POLYS	
K225	BY730742	AC66-00006A	LEVER-UP DOWN;TS-10,POM,-,-,-,-,NAT,-	

Loc.No.	TSB Parts No.	Reference No.	Description ; Specification	Remark
K240	BY730759	AC66-00035A	LEVER-TENSION ASS'Y;TS-10,SECC E20/20+SU	
K248	BY730725	AC61-00107A	SPRING ETC-TENSION LEVER;TS-10,SUS304-WP	
K250	BY730762	AC69-00104A	BAND-BRAKE ASS'Y;TS-10,-,-,-,-,-,-	
K330	BY730121	AC66-30550A	LEVER-S.BRAKE ASSY;-,POM+SUS,-,-,-,X-9	
K340	BY730120	AC66-30549A	LEVER-T.BRAKE ASSY;-,POM+SUS,-,-,-,X-9	
K350	BY730724	AC61-00106A	SPRING ETC-BRAKE;TS-10,SUS304-WPB,-,-,-,	
K470	BY730750	AC66-00020A	SLIDER-FL DRIVE;TS-10,SECC E20/20,1.0,-,	
K490	BY730726	AC61-00120A	HOLDER-FL CASS. ASS'Y;TS-10,-,-,-,-,-,-	
K502	BY730091	AC61-60561A	SPRING ETC-FL.LEVER-LR;X-9,SUS304 WPB,OD	
K530	BY730758	AC66-00034A	LEVER-FL ARM ASS'Y;TS-10,-,-,-,-,-,-,-	
K546	BY730086	AC61-50658A	GUIDE-CASS. DOOR;X-9,POM,-,-,-,NTR	

- ELECTRICAL PARTS -

601	BY630238	AC92-01077B	ASSY PCB-MAIN;W-622/TSB,TS-10A,HI-FI,120	
701	BY630243	AC94-00131A	ASSY-FUNCTION A;W-622,TSB,430,AC120V	
702	BY630245	AC94-00131B	ASSY-FUNCTION B;W-622,TSB,430,AC120V	

< INTEGRATED CIRCUITS >

IC1SS1	BY530021	0604-000186	PHOTO-COUPLER;TR,-,200mW,DIP-4,ST	⚠
IC1SS2	70795271	AC14-12006D	IC;KA431Z,TO-92,TAPING	
IC301	BY631174	1204-001832	IC-VIDEO PROCESS;LA71201,QFP,80P,-,PLAST	
IC501	BY631152	1204-001754	IC-SIGNAL PROCESSOR;AN3663FBP,QFP,64P,-,	
IC601	BY631185	AC09-00321A	IC MICOM;MN101D02D-EC,TW-422,100P,5V,14	
IC603	BY631045	1103-001148	IC-EEPROM;24C021,2KBIT,DIP,8P,300MIL,10M	
IC6B1	70795269	AC14-12006C	IC;KA7533,DIP,-	

< TRANSISTORS >

PT601	BY530048	0604-001206	PHOTO-INTERRUPTER;TR,-,150mW,CY5894102,B	
PT602	BY530048	0604-001206	PHOTO-INTERRUPTER;TR,-,150mW,CY5894102,B	
Q1P101	70693265	0501-000616	TR-SMALL SIGNAL;KSC2328A-Y,NPN,1W,TO-92L	
Q1P102	70693265	0501-000616	TR-SMALL SIGNAL;KSC2328A-Y,NPN,1W,TO-92L	
Q1P104	70795136	0501-000398	TR-SMALL SIGNAL;KSC945,NPN,250mW,TO-92,T	
Q1P107	70693265	0501-000616	TR-SMALL SIGNAL;KSC2328A-Y,NPN,1W,TO-92L	
Q1P108	70693084	0504-000142	TR-DIGITAL;KSR2001,PNP,300MW,4.7K/4.7K,T	
Q1P109	70795136	0501-000398	TR-SMALL SIGNAL;KSC945,NPN,250mW,TO-92,T	
Q1SR01	70795142	0501-000442	TR-SMALL SIGNAL;KTC3203-Y,NPN,400MW,T0-9	
Q1SR02	70795647	0502-000405	TR-POWER;-,NPN,70W,TO-220,BK,10	
Q302	70795134	0501-000303	TR-SMALL SIGNAL;KSA733,PNP,250mW,TO-92,T	
Q303	70795136	0501-000398	TR-SMALL SIGNAL;KSC945,NPN,250mW,TO-92,T	
Q304	70795134	0501-000303	TR-SMALL SIGNAL;KSA733,PNP,250mW,TO-92,T	
Q305	70795142	0501-000442	TR-SMALL SIGNAL;KTC3203-Y,NPN,400MW,T0-9	
Q306	70795134	0501-000303	TR-SMALL SIGNAL;KSA733,PNP,250mW,TO-92,T	
Q307	70795142	0501-000442	TR-SMALL SIGNAL;KTC3203-Y,NPN,400MW,T0-9	
Q308	70795142	0501-000442	TR-SMALL SIGNAL;KTC3203-Y,NPN,400MW,T0-9	
Q601	BY530014	0504-000119	TR-DIGITAL;KSR1004,NPN,300MW,47K/47K,TO-	
Q702	70795818	0501-000290	TR-SMALL SIGNAL;KSA643-Y,PNP,500mW,TO-92	
Q703	70795818	0501-000290	TR-SMALL SIGNAL;KSA643-Y,PNP,500mW,TO-92	
Q704	70795818	0501-000290	TR-SMALL SIGNAL;KSA643-Y,PNP,500mW,TO-92	
Q705	70795818	0501-000290	TR-SMALL SIGNAL;KSA643-Y,PNP,500mW,TO-92	
Q706	70795136	0501-000398	TR-SMALL SIGNAL;KSC945,NPN,250mW,TO-92,T	
Q708	70795136	0501-000398	TR-SMALL SIGNAL;KSC945,NPN,250mW,TO-92,T	
Q709	70795136	0501-000398	TR-SMALL SIGNAL;KSC945,NPN,250mW,TO-92,T	
Q710	70795136	0501-000398	TR-SMALL SIGNAL;KSC945,NPN,250mW,TO-92,T	
Q711	70795136	0501-000398	TR-SMALL SIGNAL;KSC945,NPN,250mW,TO-92,T	
Q712	70795136	0501-000398	TR-SMALL SIGNAL;KSC945,NPN,250mW,TO-92,T	
Q713	70795136	0501-000398	TR-SMALL SIGNAL;KSC945,NPN,250mW,TO-92,T	
Q714	70795136	0501-000398	TR-SMALL SIGNAL;KSC945,NPN,250mW,TO-92,T	
Q715	70795136	0501-000398	TR-SMALL SIGNAL;KSC945,NPN,250mW,TO-92,T	
Q716	70795136	0501-000398	TR-SMALL SIGNAL;KSC945,NPN,250mW,TO-92,T	
Q801	70795134	0501-000303	TR-SMALL SIGNAL;KSA733,PNP,250mW,TO-92,T	
S601	BY530003	0603-001011	PHOTO TR;NPN,35V,6V,50mA,75mW,BK	
S602	BY530003	0603-001011	PHOTO TR;NPN,35V,6V,50mA,75mW,BK	

< DIODES >

D1P101	70796385	0402-000127	DIODE-RECTIFIER;1N4002,100V,1A,DO-41,TP	
D1P102	70796385	0402-000127	DIODE-RECTIFIER;1N4002,100V,1A,DO-41,TP	
D1P106	70795150	0401-000101	DIODE-SWITCHING;1N4148,100V,200mA,DO-35,	
D1P108	70795150	0401-000101	DIODE-SWITCHING;1N4148,100V,200mA,DO-35,	
D1P109	70795150	0401-000101	DIODE-SWITCHING;1N4148,100V,200mA,DO-35,	
D1SD01	70795150	0401-000101	DIODE-SWITCHING;1N4148,100V,200mA,DO-35,	
D1SD02	70795150	0401-000101	DIODE-SWITCHING;1N4148,100V,200mA,DO-35,	
D1SR01	70795150	0401-000101	DIODE-SWITCHING;1N4148,100V,200mA,DO-35,	
D1SR02	70795150	0401-000101	DIODE-SWITCHING;1N4148,100V,200mA,DO-35,	
D1SR03	BY430010	0402-001194	DIODE-RECTIFIER;UG2D,200V,2A,DO-204AC,TP	
D1SS01	BY430012	0402-001196	DIODE-RECTIFIER;1T5,600V,1A,TS-1,TP	

Loc.No.	TSB Parts No.	Reference No.	Description ; Specification	Remark
D1SS02	BY430012	0402-001196	DIODE-RECTIFIER;1T5,600V,1A,TS-1,TP	
D1SS03	BY430012	0402-001196	DIODE-RECTIFIER;1T5,600V,1A,TS-1,TP	
D1SS04	BY430012	0402-001196	DIODE-RECTIFIER;1T5,600V,1A,TS-1,TP	
D1SS05	BY430047	0402-000012	DIODE-RECTIFIER;UF4007,1KV,1A,DO-41,TP	
D1SS07	BY430009	0402-000431	DIODE-RECTIFIER;FML-M02S,200V,2.5A,TO-22	
D1SS08	BY430011	0402-001195	DIODE-RECTIFIER;F1T4,400V,1.0A,TS-1,TP	
D503	70795150	0401-000101	DIODE-SWITCHING;1N4148,100V,200mA,DO-35,	
D601	70795150	0401-000101	DIODE-SWITCHING;1N4148,100V,200mA,DO-35,	
D603	70796385	0402-000127	DIODE-RECTIFIER;1N4002,100V,1A,DO-41,TP	
D604	70796385	0402-000127	DIODE-RECTIFIER;1N4002,100V,1A,DO-41,TP	
D605	70795150	0401-000101	DIODE-SWITCHING;1N4148,100V,200mA,DO-35,	
D606	70796385	0402-000127	DIODE-RECTIFIER;1N4002,100V,1A,DO-41,TP	
D607	70796385	0402-000127	DIODE-RECTIFIER;1N4002,100V,1A,DO-41,TP	
D701	70795150	0401-000101	DIODE-SWITCHING;1N4148,100V,200mA,DO-35,	
D702	70795150	0401-000101	DIODE-SWITCHING;1N4148,100V,200mA,DO-35,	
D704	70795150	0401-000101	DIODE-SWITCHING;1N4148,100V,200mA,DO-35,	
D705	70795150	0401-000101	DIODE-SWITCHING;1N4148,100V,200mA,DO-35,	
D708	70795150	0401-000101	DIODE-SWITCHING;1N4148,100V,200mA,DO-35,	
D709	70795150	0401-000101	DIODE-SWITCHING;1N4148,100V,200mA,DO-35,	
D710	70795150	0401-000101	DIODE-SWITCHING;1N4148,100V,200mA,DO-35,	
D804	70795150	0401-000101	DIODE-SWITCHING;1N4148,100V,200mA,DO-35,	
D805	70795150	0401-000101	DIODE-SWITCHING;1N4148,100V,200mA,DO-35,	
ZD1P01	70795272	0403-000390	DIODE-ZENER;UZP33B,33V,31.4-34.6V,1W,DO-	
ZD1P02	BY430005	0403-000717	DIODE-ZENER;MTZJ5.1B,5.1V,4.94-5.2V,500m	
ZD1P03	BY430013	0403-000720	DIODE-ZENER;MTZJ9.1B,9.1V,8.57-9.01V,500	
ZD1P05	BY430015	0403-001211	DIODE-ZENER;MTZJ12B,11.44-12.03V,500MW,D	
ZD1SR1	70795438	0403-000571	DIODE-ZENER;UZP43B,43V,40-46V,1W,DO-41,T	
< INDUCTORS >				
BD1SR1	BY330019	3301-000297	CORE-FERRITE BEAD;AA,3.6x1.2x5.7mm,1400,	
BD1SS1	70795644	AC27-92001M	INDUCTOR;RH3.5X6.5RS,BEAD(RADIAL),-,-,-	
BD1SS2	BY330019	3301-000297	CORE-FERRITE BEAD;AA,3.6x1.2x5.7mm,1400,	
L1P101	BY330009	2701-000002	INDUCTOR-AXIAL;100uH,10%,4.2x9.8mm	
L1SS01	BY330065	AC29-00003A	FILTER LINE NOISE;-,20mH MIN,-,-,-	⚠
L1SS02	70796213	AC27-12001N	COIL-CHOKE;10UH-15%,RA,K-30,Q80,150KHZ,-	
L1SS03	70796213	AC27-12001N	COIL-CHOKE;10UH-15%,RA,K-30,Q80,150KHZ,-	
L301	70795644	AC27-92001M	INDUCTOR;RH3.5X6.5RS,BEAD(RADIAL),-,-,-	
L302	BY330019	3301-000297	CORE-FERRITE BEAD;AA,3.6x1.2x5.7mm,1400,	
L303	BY330019	3301-000297	CORE-FERRITE BEAD;AA,3.6x1.2x5.7mm,1400,	
L304	BY330019	3301-000297	CORE-FERRITE BEAD;AA,3.6x1.2x5.7mm,1400,	
L305	BY330019	3301-000297	CORE-FERRITE BEAD;AA,3.6x1.2x5.7mm,1400,	
L306	70795171	2702-000120	INDUCTOR-RADIAL;15mH,5%,6.2x7.4mm	
L307	BY330009	2701-000002	INDUCTOR-AXIAL;100uH,10%,4.2x9.8mm	
L308	70795862	2702-000166	INDUCTOR-RADIAL;47uH,5%,6x6.4mm	
L501	70795168	2702-000108	INDUCTOR-RADIAL;100uH,5%,6x6.4mm	
L502	BY330019	3301-000297	CORE-FERRITE BEAD;AA,3.6x1.2x5.7mm,1400,	
L503	BY330019	3301-000297	CORE-FERRITE BEAD;AA,3.6x1.2x5.7mm,1400,	
L504	BY330046	2701-000126	INDUCTOR-AXIAL;150uH,5%,2.4x3.4mm	
L601	BY330019	3301-000297	CORE-FERRITE BEAD;AA,3.6x1.2x5.7mm,1400,	
L602	BY330009	2701-000002	INDUCTOR-AXIAL;100uH,10%,4.2x9.8mm	
L603	BY330019	3301-000297	CORE-FERRITE BEAD;AA,3.6x1.2x5.7mm,1400,	
L802	BY330019	3301-000297	CORE-FERRITE BEAD;AA,3.6x1.2x5.7mm,1400,	
LD601	BY430016	0601-000517	LED-IR;RECTANGULA,4x6.0mm,75mW,6V,950	
< CAPACITORS >				
C1P101	70795625	2401-001730	C-AL;10uF,20%,50V,GP,TP,5x11,2.5	
C1P103	BY130206	2401-001254	C-AL;4.7uF,20%,35V,GP,TP,4x7,5	
C1P104	BY130206	2401-001254	C-AL;4.7uF,20%,35V,GP,TP,4x7,5	
C1P105	BY130042	2401-000598	C-AL;1uF,20%,50V,GP,TP,4x7,5	
C1P106	BY130280	2401-002165	C-AL;100uF,20%,16V,GP,TP,6.3x7,5	
C1P108	BY130282	2401-003107	C-AL;47uF,20%,16V,GP,TP,5x7,5	
C1P112	BY130206	2401-001254	C-AL;4.7uF,20%,35V,GP,TP,4x7,5	
C1SD01	BY130196	2201-000828	C-CERAMIC,DISC;3.3nF,20%,400V,Y5U,TP,15x	⚠
C1SD05	BY130258	2201-000129	C-CERAMIC,DISC;0.1nF,10%,1kV,Y5P,TP,7x4,	
C1SD06	BY130270	2301-000423	C-FILM,PEF;3.3nF,5%,100V,TP,7x10x4.5mm,5	
C1SR01	70795578	2401-001681	C-AL;82uF,20%,200V,GP,TP,16x26,7.5m	
C1SR02	70795430	2401-000905	C-AL;22uF,20%,16V,BP,-,6x11,2.5mm	
C1SR03	BY130046	2401-001235	C-AL;4.7uF,20%,250V,WT,TP,10x12.5,5	
C1SR04	70795586	2301-000417	C-FILM,PEF;24nF,5%,50V,TP,6.5x10.5x4mm,5	
C1SR05	BY130204	2301-000180	C-FILM,PEF;18nF,0.05,100V,TP,7.2x4.5x8.0	
C1SR07	BY130272	2305-001021	C-FILM,MPEF;100nF,20%,275V,TP,17.5x7x13.	⚠
C1SS01	BY130187	2401-003137	C-AL;330UF,20%,50V,WT,TP,10X16MM,5	
C1SS03	BY130216	2201-000812	C-CERAMIC,DISC;2.2nF,20%,400V,Y5U,BK,12.	
C1SS06	70795431	2401-000385	C-AL;10uF,20%,100V,GP,TP,6.3x11,5	
C1SS07	70796014	2401-002162	C-AL;1000uF,20%,25V,WT,TP,10x20,5mm	
C1SS08	BY130045	2401-001126	C-AL;330uF,20%,25V,WT,TP,10x12.5,5	
C1SS10	BY130015	2401-001479	C-AL;470uF,20%,10V,GP,TP,-,-	

Loc.No.	TSB Parts No.	Reference No.	Description ; Specification	Remark
C1SS11	70796098	2301-000129	C-FILM,PEF;100nF,5%,50V,TP,10X9X4.3X5,5m	
C1SS35	BY130050	2401-003059	C-AL;1000UF,20%,16V,WT,TP,10X16,5	
C301	BY130042	2401-000598	C-AL;1uF,20%,50V,GP,TP,4x7,5	
C302	BY130031	2203-001721	C-CERAMIC,CHIP;360pF,5%,50V,NPO,TP,2012,	
C303	BY130191	2203-000476	C-CERAMIC,CHIP;1000nF,+80-20%,16V,Y5V,TP	
C304	72531470	2203-000408	C-CERAMIC,CHIP;0.18nF,5%,50V,NP0,TP,2012	
C305	BY130042	2401-000598	C-AL;1uF,20%,50V,GP,TP,4x7,5	
C306	BY130352	2203-000206	C-CERAMIC,CHIP;100nF,10%,50V,X7R,TP,2012	
C307	BY130282	2401-003107	C-AL;47uF,20%,16V,GP,TP,5x7,5	
C308	BY130044	2401-000922	C-AL;22uF,20%,16V,GP,TP,5x5,5	
C309	BY130273	2401-000414	C-AL;10uF,20%,16V,GP,TP,4x7,5	
C310	70795114	2401-001915	C-AL;1uF,20%,50V,GP,TP,3x5,5	
C311	BY130273	2401-000414	C-AL;10uF,20%,16V,GP,TP,4x7,5	
C312	70795075	2202-000797	C-CERAMIC,MLC-AXIAL;10NF,30%,16V,Y5S,TP,	
C313	BY130273	2401-000414	C-AL;10uF,20%,16V,GP,TP,4x7,5	
C314	BY130191	2203-000476	C-CERAMIC,CHIP;1000nF,+80-20%,16V,Y5V,TP	
C315	BY130042	2401-000598	C-AL;1uF,20%,50V,GP,TP,4x7,5	
C316	BY130042	2401-000598	C-AL;1uF,20%,50V,GP,TP,4x7,5	
C317	70795114	2401-001915	C-AL;1uF,20%,50V,GP,TP,3x5,5	
C318	70795075	2202-000797	C-CERAMIC,MLC-AXIAL;10NF,30%,16V,Y5S,TP,	
C319	70795075	2202-000797	C-CERAMIC,MLC-AXIAL;10NF,30%,16V,Y5S,TP,	
C320	70796281	2203-000260	C-CERAMIC,CHIP;10nF,10%,50V,X7R,TP,2012	
C321	BY130282	2401-003107	C-AL;47uF,20%,16V,GP,TP,5x7,5	
C322	70795075	2202-000797	C-CERAMIC,MLC-AXIAL;10NF,30%,16V,Y5S,TP,	
C323	BY130042	2401-000598	C-AL;1uF,20%,50V,GP,TP,4x7,5	
C324	70796281	2203-000260	C-CERAMIC,CHIP;10nF,10%,50V,X7R,TP,2012	
C325	BY130042	2401-000598	C-AL;1uF,20%,50V,GP,TP,4x7,5	
C326	70795974	2203-000609	C-CERAMIC,CHIP;22nF,10%,50V,X7R,TP,2012	
C327	70795114	2401-001915	C-AL;1uF,20%,50V,GP,TP,3x5,5	
C328	BY130282	2401-003107	C-AL;47uF,20%,16V,GP,TP,5x7,5	
C329	70796281	2203-000260	C-CERAMIC,CHIP;10nF,10%,50V,X7R,TP,2012	
C330	BY130293	2203-000989	C-CERAMIC,CHIP;47nF,10%,50V,X7R,TP,2012	
C331	BY130293	2203-000989	C-CERAMIC,CHIP;47nF,10%,50V,X7R,TP,2012	
C332	BY130293	2203-000989	C-CERAMIC,CHIP;47nF,10%,50V,X7R,TP,2012	
C333	BY130293	2203-000989	C-CERAMIC,CHIP;47nF,10%,50V,X7R,TP,2012	
C334	BY130282	2401-003107	C-AL;47uF,20%,16V,GP,TP,5x7,5	
C335	BY130352	2203-000206	C-CERAMIC,CHIP;100nF,10%,50V,X7R,TP,2012	
C336	BY130042	2401-000598	C-AL;1uF,20%,50V,GP,TP,4x7,5	
C337	BY130282	2401-003107	C-AL;47uF,20%,16V,GP,TP,5x7,5	
C338	70796281	2203-000260	C-CERAMIC,CHIP;10nF,10%,50V,X7R,TP,2012	
C340	BY130044	2401-000922	C-AL;22uF,20%,16V,GP,TP,5x5,5	
C342	BY130277	2401-001169	C-AL;33uF,20%,16V,GP,-,6.3x7,2.5mm	
C343	BY130352	2203-000206	C-CERAMIC,CHIP;100nF,10%,50V,X7R,TP,2012	
C344	BY130022	2203-000417	C-CERAMIC,CHIP;18nF,10%,50V,X7R,TP,2012,	
C345	70796281	2203-000260	C-CERAMIC,CHIP;10nF,10%,50V,X7R,TP,2012	
C346	BY130273	2401-000414	C-AL;10uF,20%,16V,GP,TP,4x7,5	
C347	BY130166	2203-000495	C-CERAMIC,CHIP;2.2nF,10%,50V,X7R,TP,2012	
C348	BY130011	2203-001665	C-CERAMIC,CHIP;0.56nF,10%,50V,X7R,TP,201	
C349	BY130206	2401-001254	C-AL;4.7uF,20%,35V,GP,TP,4x7,5	
C350	BY130041	2301-001014	C-FILM,PEF;6.8nF,5%,50V,TP,7x3x6,5mm	
C351	70796409	2203-001214	C-CERAMIC,CHIP;8.2nF,10%,50V,X7R,TP,2012	
C352	70796281	2203-000260	C-CERAMIC,CHIP;10nF,10%,50V,X7R,TP,2012	
C353	BY130206	2401-001254	C-AL;4.7uF,20%,35V,GP,TP,4x7,5	
C354	70795976	2203-000938	C-CERAMIC,CHIP;0.47nF,5%,50V,NP0,TP,2012	
C355	BY130209	2301-000110	C-FILM,PEF;1.8nF,5%,100V,TP,7x3.0x6.5mm,	
C356	BY130282	2401-003107	C-AL;47uF,20%,16V,GP,TP,5x7,5	
C357	BY130375	2301-000174	C-FILM,PEF;15nF,5%,100V,TP,7.2x4.0x7.5mm	
C358	70795075	2202-000797	C-CERAMIC,MLC-AXIAL;10NF,30%,16V,Y5S,TP,	
C359	70796281	2203-000260	C-CERAMIC,CHIP;10nF,10%,50V,X7R,TP,2012	
C360	70796281	2203-000260	C-CERAMIC,CHIP;10nF,10%,50V,X7R,TP,2012	
C371	BY130156	2203-001077	C-CERAMIC,CHIP;0.056nF,5%,50V,NP0,TP,201	
C372	BY130352	2203-000206	C-CERAMIC,CHIP;100nF,10%,50V,X7R,TP,2012	
C401	70795075	2202-000797	C-CERAMIC,MLC-AXIAL;10NF,30%,16V,Y5S,TP,	
C405	BY130282	2401-003107	C-AL;47uF,20%,16V,GP,TP,5x7,5	
C406	70795075	2202-000797	C-CERAMIC,MLC-AXIAL;10NF,30%,16V,Y5S,TP,	
C407	70693249	2202-000807	C-CERAMIC,MLC-AXIAL;22nF,+80-20%,25V,Y5V	
C409	70795075	2202-000797	C-CERAMIC,MLC-AXIAL;10NF,30%,16V,Y5S,TP,	
C410	70693249	2202-000807	C-CERAMIC,MLC-AXIAL;22nF,+80-20%,25V,Y5V	
C501	BY130352	2203-000206	C-CERAMIC,CHIP;100nF,10%,50V,X7R,TP,2012	
C502	BY130273	2401-000414	C-AL;10uF,20%,16V,GP,TP,4x7,5	
C503	BY130206	2401-001254	C-AL;4.7uF,20%,35V,GP,TP,4x7,5	
C504	BY130273	2401-000414	C-AL;10uF,20%,16V,GP,TP,4x7,5	
C505	BY130206	2401-001254	C-AL;4.7uF,20%,35V,GP,TP,4x7,5	
C506	BY130042	2401-000598	C-AL;1uF,20%,50V,GP,TP,4x7,5	
C507	BY130277	2401-001169	C-AL;33uF,20%,16V,GP,-,6.3x7,2.5mm	
C508	BY130273	2401-000414	C-AL;10uF,20%,16V,GP,TP,4x7,5	
C509	BY130273	2401-000414	C-AL;10uF,20%,16V,GP,TP,4x7,5	
C510	BY130082	2301-000224	C-FILM,PEF;22nF,5%,50V,TP,7.4x3.9x13mm,5	
C511	BY130352	2203-000206	C-CERAMIC,CHIP;100nF,10%,50V,X7R,TP,2012	

Loc.No.	TSB Parts No.	Reference No.	Description ; Specification	Remark
C512	BY130019	2203-000126	C-CERAMIC,CHIP;1.2nF,10%,50V,X7R,TP,2012	
C513	70795075	2202-000797	C-CERAMIC,MLC-AXIAL;10NF,30%,16V,Y5S,TP,	
C514	70795075	2202-000797	C-CERAMIC,MLC-AXIAL;10NF,30%,16V,Y5S,TP,	
C515	70796281	2203-000260	C-CERAMIC,CHIP;10nF,10%,50V,X7R,TP,2012	
C516	BY130282	2401-003107	C-AL;47uF,20%,16V,GP,TP,5x7,5	
C517	BY130352	2203-000206	C-CERAMIC,CHIP;100nF,10%,50V,X7R,TP,2012	
C518	BY130042	2401-000598	C-AL;1uF,20%,50V,GP,TP,4x7,5	
C519	72531485	2401-001931	C-AL;220nF,20%,50V,-,TP,4x7mm,5	
C520	BY130082	2301-000224	C-FILM,PEF;22nF,5%,50V,TP,7.4x3.9x13mm,5	
C521	BY130273	2401-000414	C-AL;10uF,20%,16V,GP,TP,4x7,5	
C522	BY130273	2401-000414	C-AL;10uF,20%,16V,GP,TP,4x7,5	
C523	BY130277	2401-001169	C-AL;33uF,20%,16V,GP,-,6.3x7,2.5mm	
C526	BY130206	2401-001254	C-AL;4.7uF,20%,35V,GP,TP,4x7,5	
C527	72531485	2401-001931	C-AL;220nF,20%,50V,-,TP,4x7mm,5	
C528	BY130159	2401-001020	C-AL;3.3UF,20%,50V,GP,TP,4X7,5	
C529	BY130042	2401-000598	C-AL;1uF,20%,50V,GP,TP,4x7,5	
C530	70796281	2203-000260	C-CERAMIC,CHIP;10nF,10%,50V,X7R,TP,2012	
C531	BY130282	2401-003107	C-AL;47uF,20%,16V,GP,TP,5x7,5	
C532	BY130352	2203-000206	C-CERAMIC,CHIP;100nF,10%,50V,X7R,TP,2012	
C533	BY130352	2203-000206	C-CERAMIC,CHIP;100nF,10%,50V,X7R,TP,2012	
C534	70693249	2202-000807	C-CERAMIC,MLC-AXIAL;22nF,+80-20%,25V,Y5V	
C535	BY130273	2401-000414	C-AL;10uF,20%,16V,GP,TP,4x7,5	
C536	BY130424	2401-000665	C-AL;2.2uF,20%,50V,GP,TP,3.5x5,5	
C537	BY130273	2401-000414	C-AL;10uF,20%,16V,GP,TP,4x7,5	
C538	70795075	2202-000797	C-CERAMIC,MLC-AXIAL;10NF,30%,16V,Y5S,TP,	
C540	BY130282	2401-003107	C-AL;47uF,20%,16V,GP,TP,5x7,5	
C541	70796281	2203-000260	C-CERAMIC,CHIP;10nF,10%,50V,X7R,TP,2012	
C542	BY130273	2401-000414	C-AL;10uF,20%,16V,GP,TP,4x7,5	
C543	BY130082	2301-000224	C-FILM,PEF;22nF,5%,50V,TP,7.4x3.9x13mm,5	
C544	BY130273	2401-000414	C-AL;10uF,20%,16V,GP,TP,4x7,5	
C601	70796281	2203-000260	C-CERAMIC,CHIP;10nF,10%,50V,X7R,TP,2012	
C602	70795075	2202-000797	C-CERAMIC,MLC-AXIAL;10NF,30%,16V,Y5S,TP,	
C603	70795075	2202-000797	C-CERAMIC,MLC-AXIAL;10NF,30%,16V,Y5S,TP,	
C605	BY130317	2401-000360	C-AL;100uF,20%,50V,GP,TP,8x11.5,5	
C606	70796281	2203-000260	C-CERAMIC,CHIP;10nF,10%,50V,X7R,TP,2012	
C607	70796281	2203-000260	C-CERAMIC,CHIP;10nF,10%,50V,X7R,TP,2012	
C608	BY130280	2401-002165	C-AL;100uF,20%,16V,GP,TP,6.3x7,5	
C609	70795974	2203-000609	C-CERAMIC,CHIP;22nF,10%,50V,X7R,TP,2012	
C610	BY130293	2203-000989	C-CERAMIC,CHIP;47nF,10%,50V,X7R,TP,2012	
C611	70795363	2202-000791	C-CERAMIC,MLC-AXIAL;150pF,10%,50V,Y5P,TP	
C613	BY130009	2401-001545	C-AL;47uF,20%,25V,GP,TP,6.3x7mm,2.5	
C614	70796281	2203-000260	C-CERAMIC,CHIP;10nF,10%,50V,X7R,TP,2012	
C615	70795075	2202-000797	C-CERAMIC,MLC-AXIAL;10NF,30%,16V,Y5S,TP,	
C616	70796281	2203-000260	C-CERAMIC,CHIP;10nF,10%,50V,X7R,TP,2012	
C617	BY130282	2401-003107	C-AL;47uF,20%,16V,GP,TP,5x7,5	
C618	BY130152	2203-000634	C-CERAMIC,CHIP;0.022nF,5%,50V,NP0,TP,201	
C619	BY130154	2203-000683	C-CERAMIC,CHIP;0.027nF,5%,50V,NP0,TP,201	
C622	BY130042	2401-000598	C-AL;1uF,20%,50V,GP,TP,4x7,5	
C623	BY130069	2202-000121	C-CERAMIC,MLC-AXIAL;100pF,10%,50V,Y5P,TP	
C624	BY130280	2401-002165	C-AL;100uF,20%,16V,GP,TP,6.3x7,5	
C625	70796281	2203-000260	C-CERAMIC,CHIP;10nF,10%,50V,X7R,TP,2012	
C626	BY130027	2202-002037	C-CERAMIC,MLC-AXIAL;100nF,80-20%,50V,Y5V	
C627	BY130296	2203-001245	C-CERAMIC,CHIP;0.082nF,5%,50V,NP0,TP,201	
C628	BY130277	2401-001169	C-AL;33uF,20%,16V,GP,-,6.3x7,2.5mm	
C629	BY130014	2203-001579	C-CERAMIC,CHIP;15nF,10%,50V,NP0,TP,2012	
C630	BY130282	2401-003107	C-AL;47uF,20%,16V,GP,TP,5x7,5	
C631	70796281	2203-000260	C-CERAMIC,CHIP;10nF,10%,50V,X7R,TP,2012	
C632	BY130156	2203-001077	C-CERAMIC,CHIP;0.056nF,5%,50V,NP0,TP,201	
C633	BY130351	2203-000142	C-CERAMIC,CHIP;1.5nF,10%,50V,X7R,TP,2012	
C634	BY130156	2203-001077	C-CERAMIC,CHIP;0.056nF,5%,50V,NP0,TP,201	
C635	70796281	2203-000260	C-CERAMIC,CHIP;10nF,10%,50V,X7R,TP,2012	
C636	70796281	2203-000260	C-CERAMIC,CHIP;10nF,10%,50V,X7R,TP,2012	
C643	70796281	2203-000260	C-CERAMIC,CHIP;10nF,10%,50V,X7R,TP,2012	
C644	70796281	2203-000260	C-CERAMIC,CHIP;10nF,10%,50V,X7R,TP,2012	
C645	70796281	2203-000260	C-CERAMIC,CHIP;10nF,10%,50V,X7R,TP,2012	
C657	70796281	2203-000260	C-CERAMIC,CHIP;10nF,10%,50V,X7R,TP,2012	
C701	BY130262	2202-000173	C-CERAMIC,MLC-AXIAL;1nF,10%,50V,Y5P,TP,1	
C702	70795075	2202-000797	C-CERAMIC,MLC-AXIAL;10NF,30%,16V,Y5S,TP,	
C703	BY130280	2401-002165	C-AL;100uF,20%,16V,GP,TP,6.3x7,5	
C801	BY130282	2401-003107	C-AL;47uF,20%,16V,GP,TP,5x7,5	
C802	BY130015	2401-001479	C-AL;470uF,20%,10V,GP,TP,-,-	
C803	BY130282	2401-003107	C-AL;47uF,20%,16V,GP,TP,5x7,5	
C805	BY130426	2401-000438	C-AL;10uF,20%,25V,GP,-,5x11,2mm	
C8H1	BY130027	2202-002037	C-CERAMIC,MLC-AXIAL;100nF,80-20%,50V,Y5V	
C8HF1	BY130027	2202-002037	C-CERAMIC,MLC-AXIAL;100nF,80-20%,50V,Y5V	

< RESISTORS >

R1P101	BY230025	2001-000855	R-CARBON;560OHM,5%,1/4W,AA,TP,2.4X6.4MM	

Loc.No.	TSB Parts No.	Reference No.	Description ; Specification	Remark
R1P102	70795020	2001-000449	R-CARBON;2.2KOHM,5%,1/8W,AA,TP,1.8X3.2M	
R1P103	70795019	2001-000515	R-CARBON;220OHM,5%,1/8W,AA,TP,1.8X3.2MM	
R1P104	70795025	2001-000554	R-CARBON;270OHM,5%,1/8W,AA,TP,1.8X3.2MM	
R1P110	70796067	2001-000362	R-CARBON;150OHM,5%,1/8W,AA,TP,1.8X3.2MM	
R1SD01	70796356	2001-000490	R-CARBON;200OHM,5%,1/8W,AA,TP,1.8X3.2MM	
R1SD02	70795019	2001-000515	R-CARBON;220OHM,5%,1/8W,AA,TP,1.8X3.2MM	
R1SD03	70795005	2001-000429	R-CARBON;1KOHM,5%,1/8W,AA,TP,1.8X3.2MM	
R1SR01	70795002	2002-000320	R-COMPOSITION;1.8Mohm,10%,1/2W,AA,TP,3.5	
R1SR02	BY230018	2003-002117	R-METAL OXIDE(S);330Kohm,5%,1W,AA,TP,3.3	
R1SR03	BY230016	2003-000314	R-METAL OXIDE;47ohm,5%,2W,AE,TP,6x16mm	
R1SR04	BY230016	2003-000314	R-METAL OXIDE;47ohm,5%,2W,AE,TP,6x16mm	
R1SR05	70795030	2001-000003	R-CARBON;330ohm,5%,1/8W,AA,TP,1.8x3.2mm	
R1SR06	70796275	2003-000119	R-METAL OXIDE;0.68ohm,5%,2W,AE,TP,6x16mm	
R1SR07	70795040	2001-000734	R-CARBON;4.7KOHM,5%,1/8W,AA,TP,1.8X3.2M	
R1SS01	BY230027	2003-000994	R-METAL OXIDE(S);33Kohm,5%,2W,AF,TP,3.9x	
R1SS02	BY230027	2003-000994	R-METAL OXIDE(S);33Kohm,5%,2W,AF,TP,3.9x	
R1SS04	70795005	2001-000429	R-CARBON;1KOHM,5%,1/8W,AA,TP,1.8X3.2MM	
R1SS05	70795640	2004-000869	R-METAL;3Kohm,1%,1/8W,AA,TP,1.8x3.2mm	
R1SS06	70795638	2004-000459	R-METAL;2.2Kohm,1%,1/8W,AA,TP,1.8x3.2m	
R301	70795521	2007-000409	R-CHIP;15KOHM,5%,1/10W,DA,TP,2012	
R302	70795541	2007-001055	R-CHIP;6.2KOHM,5%,1/10W,DA,TP,2012	
R303	70795523	2007-000267	R-CHIP;1.8KOHM,5%,1/10W,DA,TP,2012	
R304	70795523	2007-000267	R-CHIP;1.8KOHM,5%,1/10W,DA,TP,2012	
R305	70795040	2001-000734	R-CARBON;4.7KOHM,5%,1/8W,AA,TP,1.8X3.2M	
R306	70796067	2001-000362	R-CARBON;150OHM,5%,1/8W,AA,TP,1.8X3.2MM	
R308	70795528	2007-000565	R-CHIP;220KOHM,5%,1/10W,DA,TP,2012	
R309	BY230256	2001-000004	R-CARBON;200KOHM,5%,1/8W,AA,TP,1.8X3.2M	
R310	70795020	2001-000449	R-CARBON;2.2KOHM,5%,1/8W,AA,TP,1.8X3.2M	
R311	70795712	2007-001113	R-CHIP;680KOHM,5%,1/10W,DA,TP,2012	
R312	70795519	2007-000221	R-CHIP;1.2KOHM,5%,1/10W,DA,TP,2012	
R313	70795357	2001-000258	R-CARBON;1.8KOHM,5%,1/8W,AA,TP,1.8X3.2M	
R314	70795520	2007-000241	R-CHIP;1.5KOHM,5%,1/10W,DA,TP,2012	
R315	70795546	2007-001177	R-CHIP;8.2KOHM,5%,1/10W,DA,TP,2012	
R316	70795006	2001-000290	R-CARBON;10KOHM,5%,1/8W,AA,TP,1.8X3.2MM	
R317	70795606	2001-000387	R-CARBON;16KOHM,5%,1/8W,AA,TP,1.8X3.2MM	
R318	70795606	2001-000387	R-CARBON;16KOHM,5%,1/8W,AA,TP,1.8X3.2MM	
R319	70795006	2001-000290	R-CARBON;10KOHM,5%,1/8W,AA,TP,1.8X3.2MM	
R320	70795520	2007-000241	R-CHIP;1.5KOHM,5%,1/10W,DA,TP,2012	
R322	70795447	2001-000878	R-CARBON;6.2KOHM,5%,1/8W,AA,TP,1.8X3.2M	
R326	70795519	2007-000221	R-CHIP;1.2KOHM,5%,1/10W,DA,TP,2012	
R327	70795513	2007-000029	R-CHIP;0OHM,5%,1/10W,DA,TP,2012	
R328	70795718	2007-001224	R-CHIP;9.1KOHM,5%,1/10W,DA,TP,2012	
R329	BY230094	2007-000757	R-CHIP;330KOHM,5%,1/10W,DA,TP,2012	
R330	70795688	2007-000401	R-CHIP;150OHM,5%,1/10W,DA,TP,2012	
R331	70795696	2007-000653	R-CHIP;27KOHM,5%,1/10W,DA,TP,2012	
R332	70795515	2007-000468	R-CHIP;1KOHM,5%,1/10W,DA,TP,2012	
R333	BY230019	2001-000221	R-CARBON;1.2KOHM,5%,1/8W,AA,TP,1.8X3.2M	
R334	70795527	2007-000586	R-CHIP;22KOHM,5%,1/10W,DA,TP,2012	
R335	70795705	2007-000941	R-CHIP;47KOHM,5%,1/10W,DA,TP,2012	
R336	70795516	2007-000300	R-CHIP;10KOHM,5%,1/10W,DA,TP,2012	
R337	70795526	2007-000493	R-CHIP;2.2KOHM,5%,1/10W,DA,TP,2012	
R338	70795683	2007-000290	R-CHIP;100OHM,5%,1/10W,DA,TP,2012	
R339	70795020	2001-000449	R-CARBON;2.2KOHM,5%,1/8W,AA,TP,1.8X3.2M	
R340	70795020	2001-000449	R-CARBON;2.2KOHM,5%,1/8W,AA,TP,1.8X3.2M	
R341	70795021	2001-000522	R-CARBON;22KOHM,5%,1/8W,AA,TP,1.8X3.2MM	
R342	70795516	2007-000300	R-CHIP;10KOHM,5%,1/10W,DA,TP,2012	
R343	70795537	2007-001001	R-CHIP;510OHM,5%,1/10W,DA,TP,2012	
R344	70795537	2007-001001	R-CHIP;510OHM,5%,1/10W,DA,TP,2012	
R346	BY230097	2007-001166	R-CHIP;75OHM,5%,1/10W,DA,TP,2012	
R348	BY230007	2007-000964	R-CHIP;5.1KOHM,5%,1/10W,DA,TP,2012	
R401	70795039	2001-000780	R-CARBON;470OHM,5%,1/8W,AA,TP,1.8X3.2MM	
R402	70795039	2001-000780	R-CARBON;470OHM,5%,1/8W,AA,TP,1.8X3.2MM	
R501	70795539	2007-000981	R-CHIP;5.6KOHM,5%,1/10W,DA,TP,2012	
R503	70795539	2007-000981	R-CHIP;5.6KOHM,5%,1/10W,DA,TP,2012	
R506	70795533	2007-000774	R-CHIP;33KOHM,5%,1/10W,DA,TP,2012	
R507	70795515	2007-000468	R-CHIP;1KOHM,5%,1/10W,DA,TP,2012	
R510	BY230090	2001-000005	R-CARBON;390ohm,5%,1/8W,AA,TP,1.8x3.2mm	
R511	70795589	2007-000872	R-CHIP;4.7KOHM,5%,1/10W,DA,TP,2012	
R512	BY230090	2001-000005	R-CARBON;390ohm,5%,1/8W,AA,TP,1.8x3.2mm	
R513	70795589	2007-000872	R-CHIP;4.7KOHM,5%,1/10W,DA,TP,2012	
R514	70795039	2001-000780	R-CARBON;470OHM,5%,1/8W,AA,TP,1.8X3.2MM	
R515	70795541	2007-001055	R-CHIP;6.2KOHM,5%,1/10W,DA,TP,2012	
R516	70795039	2001-000780	R-CARBON;470OHM,5%,1/8W,AA,TP,1.8X3.2MM	
R517	70795701	2007-000804	R-CHIP;36KOHM,5%,1/10W,DA,TP,2012	
R518	70795718	2007-001224	R-CHIP;9.1KOHM,5%,1/10W,DA,TP,2012	
R519	70795041	2001-000786	R-CARBON;47KOHM,5%,1/8W,AA,TP,1.8X3.2MM	
R520	70795041	2001-000786	R-CARBON;47KOHM,5%,1/8W,AA,TP,1.8X3.2MM	
R521	70699144	2001-000472	R-CARBON;2.7KOHM,5%,1/8W,AA,TP,1.8X3.2M	
R522	70795529	2007-000518	R-CHIP;2.7KOHM,5%,1/10W,DA,TP,2012	

Loc.No.	TSB Parts No.	Reference No.	Description ; Specification	Remark
R525	70699144	2001-000472	R-CARBON;2.7KOHM,5%,1/8W,AA,TP,1.8X3.2M	
R527	70795006	2001-000290	R-CARBON;10KOHM,5%,1/8W,AA,TP,1.8X3.2MM	
R530	70795605	2001-000347	R-CARBON;13KOHM,5%,1/8W,AA,TP,1.8X3.2MM	
R531	70795006	2001-000290	R-CARBON;10KOHM,5%,1/8W,AA,TP,1.8X3.2MM	
R601	70795527	2007-000586	R-CHIP;22KOHM,5%,1/10W,DA,TP,2012	
R602	70795525	2007-000572	R-CHIP;220OHM,5%,1/10W,DA,TP,2012	
R603	70795527	2007-000586	R-CHIP;22KOHM,5%,1/10W,DA,TP,2012	
R604	70795525	2007-000572	R-CHIP;220OHM,5%,1/10W,DA,TP,2012	
R605	BY230144	2001-000111	R-CARBON;150OHM,5%,1/4W,AA,TP,2.4X6.4MM	
R606	70795021	2001-000522	R-CARBON;22KOHM,5%,1/8W,AA,TP,1.8X3.2MM	
R607	72532205	2007-000738	R-CHIP;30KOHM,5%,1/10W,DA,TP,2012	
R608	70795005	2001-000429	R-CARBON;1KOHM,5%,1/8W,AA,TP,1.8X3.2MM	
R609	70795005	2001-000429	R-CARBON;1KOHM,5%,1/8W,AA,TP,1.8X3.2MM	
R610	70795005	2001-000429	R-CARBON;1KOHM,5%,1/8W,AA,TP,1.8X3.2MM	
R613	70795006	2001-000290	R-CARBON;10KOHM,5%,1/8W,AA,TP,1.8X3.2MM	
R614	70795005	2001-000429	R-CARBON;1KOHM,5%,1/8W,AA,TP,1.8X3.2MM	
R615	70795539	2007-000981	R-CHIP;5.6KOHM,5%,1/10W,DA,TP,2012	
R616	70795005	2001-000429	R-CARBON;1KOHM,5%,1/8W,AA,TP,1.8X3.2MM	
R617	70795519	2007-000221	R-CHIP;1.2KOHM,5%,1/10W,DA,TP,2012	
R618	70795708	2007-001039	R-CHIP;56KOHM,5%,1/10W,DA,TP,2012	
R619	70795006	2001-000290	R-CARBON;10KOHM,5%,1/8W,AA,TP,1.8X3.2MM	
R621	70795039	2001-000780	R-CARBON;470OHM,5%,1/8W,AA,TP,1.8X3.2MM	
R622	70795039	2001-000780	R-CARBON;470OHM,5%,1/8W,AA,TP,1.8X3.2MM	
R623	70795516	2007-000300	R-CHIP;10KOHM,5%,1/10W,DA,TP,2012	
R624	70795516	2007-000300	R-CHIP;10KOHM,5%,1/10W,DA,TP,2012	
R630	70795047	2001-000864	R-CARBON;56KOHM,5%,1/8W,AA,TP,1.8X3.2MM	
R631	70795047	2001-000864	R-CARBON;56KOHM,5%,1/8W,AA,TP,1.8X3.2MM	
R632	70795041	2001-000786	R-CARBON;47KOHM,5%,1/8W,AA,TP,1.8X3.2MM	
R634	BY230092	2007-000068	R-CHIP;470KOHM,5%,1/10W,DA,TP,2012	
R635	70795515	2007-000468	R-CHIP;1KOHM,5%,1/10W,DA,TP,2012	
R637	70795004	2001-000281	R-CARBON;100OHM,5%,1/8W,AA,TP,1.8X3.2MM	
R638	70795031	2001-000591	R-CARBON;3.3KOHM,5%,1/8W,AA,TP,1.8X3.2M	
R639	70795357	2001-000258	R-CARBON;1.8KOHM,5%,1/8W,AA,TP,1.8X3.2M	
R641	70795006	2001-000290	R-CARBON;10KOHM,5%,1/8W,AA,TP,1.8X3.2MM	
R643	70795516	2007-000300	R-CHIP;10KOHM,5%,1/10W,DA,TP,2012	
R644	70795516	2007-000300	R-CHIP;10KOHM,5%,1/10W,DA,TP,2012	
R645	70795516	2007-000300	R-CHIP;10KOHM,5%,1/10W,DA,TP,2012	
R646	70795539	2007-000981	R-CHIP;5.6KOHM,5%,1/10W,DA,TP,2012	
R647	70795531	2007-000766	R-CHIP;330OHM,5%,1/10W,DA,TP,2012	
R648	70795531	2007-000766	R-CHIP;330OHM,5%,1/10W,DA,TP,2012	
R649	70795589	2007-000872	R-CHIP;4.7KOHM,5%,1/10W,DA,TP,2012	
R650	70795589	2007-000872	R-CHIP;4.7KOHM,5%,1/10W,DA,TP,2012	
R651	70795589	2007-000872	R-CHIP;4.7KOHM,5%,1/10W,DA,TP,2012	
R652	70795516	2007-000300	R-CHIP;10KOHM,5%,1/10W,DA,TP,2012	
R653	70795005	2001-000429	R-CARBON;1KOHM,5%,1/8W,AA,TP,1.8X3.2MM	
R656	70795516	2007-000300	R-CHIP;10KOHM,5%,1/10W,DA,TP,2012	
R660	70795052	2001-000010	R-CARBON;68KOHM,5%,1/8W,AA,TP,1.8X3.2MM	
R661	70795005	2001-000429	R-CARBON;1KOHM,5%,1/8W,AA,TP,1.8X3.2MM	
R662	70795006	2001-000290	R-CARBON;10KOHM,5%,1/8W,AA,TP,1.8X3.2MM	
R663	BY230257	2001-000065	R-CARBON;10KOHM,5%,1/4W,AA,TP,2.4X6.4MM	
R664	70795005	2001-000429	R-CARBON;1KOHM,5%,1/8W,AA,TP,1.8X3.2MM	
R690	70795005	2001-000429	R-CARBON;1KOHM,5%,1/8W,AA,TP,1.8X3.2MM	
R691	70795005	2001-000429	R-CARBON;1KOHM,5%,1/8W,AA,TP,1.8X3.2MM	
R692	70795005	2001-000429	R-CARBON;1KOHM,5%,1/8W,AA,TP,1.8X3.2MM	
R6F2	70795041	2001-000786	R-CARBON;47KOHM,5%,1/8W,AA,TP,1.8X3.2MM	
R6F3	BY230038	2001-000812	R-CARBON;5.6KOHM,5%,1/8W,AA,TP,1.8X3.2M	
R6F4	70795539	2007-000981	R-CHIP;5.6KOHM,5%,1/10W,DA,TP,2012	
R713	70795020	2001-000449	R-CARBON;2.2KOHM,5%,1/8W,AA,TP,1.8X3.2M	
R714	70795020	2001-000449	R-CARBON;2.2KOHM,5%,1/8W,AA,TP,1.8X3.2M	
R715	70795526	2007-000493	R-CHIP;2.2KOHM,5%,1/10W,DA,TP,2012	
R716	70795526	2007-000493	R-CHIP;2.2KOHM,5%,1/10W,DA,TP,2012	
R717	70795006	2001-000290	R-CARBON;10KOHM,5%,1/8W,AA,TP,1.8X3.2MM	
R718	70795006	2001-000290	R-CARBON;10KOHM,5%,1/8W,AA,TP,1.8X3.2MM	
R719	70795006	2001-000290	R-CARBON;10KOHM,5%,1/8W,AA,TP,1.8X3.2MM	
R720	70795006	2001-000290	R-CARBON;10KOHM,5%,1/8W,AA,TP,1.8X3.2MM	
R721	70795006	2001-000290	R-CARBON;10KOHM,5%,1/8W,AA,TP,1.8X3.2MM	
R722	70795006	2001-000290	R-CARBON;10KOHM,5%,1/8W,AA,TP,1.8X3.2MM	
R723	70795006	2001-000290	R-CARBON;10KOHM,5%,1/8W,AA,TP,1.8X3.2MM	
R724	70795006	2001-000290	R-CARBON;10KOHM,5%,1/8W,AA,TP,1.8X3.2MM	
R725	70795006	2001-000290	R-CARBON;10KOHM,5%,1/8W,AA,TP,1.8X3.2MM	
R726	70795054	2001-000969	R-CARBON;75OHM,5%,1/8W,AA,TP,1.8X3.2MM	
R728	70795054	2001-000969	R-CARBON;75OHM,5%,1/8W,AA,TP,1.8X3.2MM	
R729	70795054	2001-000969	R-CARBON;75OHM,5%,1/8W,AA,TP,1.8X3.2MM	
R730	70795054	2001-000969	R-CARBON;75OHM,5%,1/8W,AA,TP,1.8X3.2MM	
R731	70795054	2001-000969	R-CARBON;75OHM,5%,1/8W,AA,TP,1.8X3.2MM	
R732	70795054	2001-000969	R-CARBON;75OHM,5%,1/8W,AA,TP,1.8X3.2MM	
R733	70795054	2001-000969	R-CARBON;75OHM,5%,1/8W,AA,TP,1.8X3.2MM	
R734	70795054	2001-000969	R-CARBON;75OHM,5%,1/8W,AA,TP,1.8X3.2MM	
R735	70795054	2001-000969	R-CARBON;75OHM,5%,1/8W,AA,TP,1.8X3.2MM	

Loc.No.	TSB Parts No.	Reference No.	Description ; Specification	Remark
R736	70795054	2001-000969	R-CARBON;75OHM,5%,1/8W,AA,TP,1.8X3.2MM	
R737	70795006	2001-000290	R-CARBON;10KOHM,5%,1/8W,AA,TP,1.8X3.2MM	
R741	70795040	2001-000734	R-CARBON;4.7KOHM,5%,1/8W,AA,TP,1.8X3.2M	
R742	70795040	2001-000734	R-CARBON;4.7KOHM,5%,1/8W,AA,TP,1.8X3.2M	
R743	70795040	2001-000734	R-CARBON;4.7KOHM,5%,1/8W,AA,TP,1.8X3.2M	
R745	70795054	2001-000969	R-CARBON;75OHM,5%,1/8W,AA,TP,1.8X3.2MM	
R747	70795006	2001-000290	R-CARBON;10KOHM,5%,1/8W,AA,TP,1.8X3.2MM	
R801	70795054	2001-000969	R-CARBON;75OHM,5%,1/8W,AA,TP,1.8X3.2MM	
R802	BY230021	2001-000025	R-CARBON;75OHM,5%,1/4W,AA,TP,2.4X6.4MM	
R803	70795353	2001-001026	R-CARBON;910OHM,5%,1/8W,AA,TP,1.8X3.2MM	
R804	70795054	2001-000969	R-CARBON;75OHM,5%,1/8W,AA,TP,1.8X3.2MM	
R8F1	70795041	2001-000786	R-CARBON;47KOHM,5%,1/8W,AA,TP,1.8X3.2MM	
< MISCELLANEOUS >				
CN1SS1	70796223	3711-000178	CONNECTOR-HEADER;1WALL,2P,1R,3.96mm,STRA	
CN301	70796387	3708-000391	CONNECTOR-FPC/FFC/PIC;10P,1.25mm,STRAIGH	
CN302	BY634412	3710-001648	CONNECTOR-SOCKET;2P,1R,2.5mm,STRAIGHT,SN	
CN303	BY634023	3708-001165	CONNECTOR-FPC/FFC/PIC;6P,1.25mm,STRAIGHT	
CN604	BY634669	3711-004833	CONNECTOR-HEADER;BOX,12P,2R,2MM,STRAIGHT	
CN701	BY634284	3711-004415	CONNECTOR-HEADER;3WALL,11P,1R,2mm,STRAIG	
CN703	BY634668	3711-004414	CONNECTOR-HEADER;3WALL,13P,1R,2mm,STRAIG	
CN7FT1	BY634667	3710-001563	CONNECTOR-SOCKET;13P,1R,2mm,ANGLE,SN	
CN7FT2	BY634269	3710-001564	CONNECTOR-SOCKET;11P,1R,2mm,ANGLE,SN	
DT701	BY634672	AC07-00029A	LED DISPLAY;BCD-9007E(BRIGHT),W-527/VR82	
F1SD01	70795420	3601-001122	FUSE-CARTRIDGE;250V,1.6A,FAST-ACTING,GLA	⚠
FC1SS1	BY634083	3602-000103	FUSE-CLIP;-,-,10mohm	
FC1SS2	BY634083	3602-000103	FUSE-CLIP;-,-,10mohm	
GP601	BY730731	AC63-00043A	SHIELD CASE-GROUND PCB;SV-643F,STPE,T0.3	
JK7W01	BY634273	AC37-00013A	JACK-PIN;-,-,3P,BLK,DPSE-9946	
JK801	BY634001	AC37-20001G	JACK-RCA;DPAE-,6P,HIFI,PI3.3	
PT1SD1	BY330067	AC26-00002B	TRANS SWITCHING;-,-,EE2621,-,UL/CSA/DEMK	⚠
RM701	BY730627	AC32-00002A	MODULE REMOCON;-,GP1U291Q,38KHZ,-,7.3X13	
SW401	BY632003	3408-001042	SWITCH-SLIDE;DC 12V,100mA,-,OFF-ON,-	
SW602	BY632005	AC34-20100B	SWITCH-REC;-,-,X-9,-	
SW603	BY632004	AC34-20100A	SWITCH-MODE;-,-,X-9,-	
SW7W01	BY632012	3404-001188	SWITCH-TACT;12V,50MA,100GF,6X6X5,SPST	
SW7W02	BY632012	3404-001188	SWITCH-TACT;12V,50MA,100GF,6X6X5,SPST	
SW7W03	BY632012	3404-001188	SWITCH-TACT;12V,50MA,100GF,6X6X5,SPST	
SW7W04	BY632012	3404-001188	SWITCH-TACT;12V,50MA,100GF,6X6X5,SPST	
SW7W05	BY632012	3404-001188	SWITCH-TACT;12V,50MA,100GF,6X6X5,SPST	
SW7W06	BY632012	3404-001188	SWITCH-TACT;12V,50MA,100GF,6X6X5,SPST	
SW7W07	BY632012	3404-001188	SWITCH-TACT;12V,50MA,100GF,6X6X5,SPST	
SW7W08	BY632012	3404-001188	SWITCH-TACT;12V,50MA,100GF,6X6X5,SPST	
SW7W09	BY632012	3404-001188	SWITCH-TACT;12V,50MA,100GF,6X6X5,SPST	
TM401	BY634275	AC40-00007A	TM BLOCK;115VD025AP,NTSC-M,115VD025AP,Y	
VA1SS1	BY634022	1405-001026	VARISTOR;470V,600A,9x7mm,TP	⚠
XT301	BY633012	2801-003399	CRYSTAL-UNIT;3.579545MHz,15ppm,28-AAA,S,	
XT601	70796216	2801-001384	CRYSTAL-UNIT;14.31818MHz,30ppm,28-AAA,16	

TOSHIBA VIDEO PRODUCTS PTE LTD

438B ALEXANDRA ROAD BLOCK B #06-01
ALEXANDRA TECHNOPARK
SINGAPORE 119968